TRIUMPH

REPLACEMENT PARTS CATALOGUE

TR 25 W

1970 Model

TRIUMPH ENGINEERING COMPANY LIMITED
MERIDEN WORKS · ALLESLEY · COVENTRY · ENGLAND

TELEPHONE MERIDEN 331 TELEX 31305 TELEGRAMS "TRUSTY, COVENTRY"

Part No. 99-0906

PUBLISHED SEPTEMBER 1969

TRIUMPH WIPAC CHAMPION Matchless BSA NGK SPARK PLUGS ARIEL

Classic BIKE SHOP

01527 454158
sales@classicbikeshop.co.uk
www.classicbikeshop.co.uk

Classic Motorcycle Parts for BSA, Triumph, Norton, AMC, Matchless and More.

Spares include Exhausts, Silencers, British and Custom Seats, Brake and Wheel Components, Lucas Equipment, Cafe Racer Parts, Engine and Frame Parts and thousands more items.

Classic Bike Shop Ltd is a long established business with its roots dating back to the 1950's. Based in Redditch Worcestershire. We provide an online mail order service supplying classic motorcycle parts directly to customers both locally and worldwide. We have an extensive range of classic bike parts and spares for Triumph, BSA, Norton, AMC, Matchless models and other vintage bikes. We also have a section on the website for cafe racers, bobbers and custom bikes if you are looking for something a little different to get that unique look.

PayPal MasterCard Maestro VISA VISA Electron

CHAMPION Matchless BSA NGK SPARK PLUGS ARIEL SURFLEX HEPOLITE

PARTS INQUIRY FORM

If we do not have the parts you are looking for on our website please
Email your inquiry form to sales@classicbikeshop.co.uk
(Please note we will try our very best to get back to you as soon as we can, but some inquiries may take longer then others.)

Customer Information
Name:
Phone Number:
Email:

Part Number	Description	Qty

01527 454158 www.classicbikeshop.co.uk sales@classicbikeshop.co.uk

TRIUMPH GUARANTEE

1. In this Guarantee the word "machine" refers to the motor cycle, scooter, motor cycle combination or sidecar as the case may be, purchased by the Purchaser.

2. In order to obtain the benefit of this Guarantee, the Purchaser must have correctly completed the registration form and returned it to us within fourteen days of the purchase.

3. We will supply, free of charge, a new part in exchange for, or, if we consider repair sufficient, will repair free of charge any part proved within six months of the date of purchase of any new machine, (three months overseas) or within three months of its renewal or repair in the case of a part already renewed or repaired, to be defective by reason of our faulty workmanship or materials. We do not undertake to bear the cost of fitting such new or repaired part or accessory.

.4 Any part considered to be defective must be sent to our Works, carriage paid, accompanied by the following information:—

   (a) Name of purchaser and his address;
   (b) Date of purchase of machine;
   (c) Name of dealer from whom the purchase was made;
   (d) Engine number and model.

5. This Guarantee shall not extend to defects or damage appearing after misuse, neglect, abnormal stress or strain, or the incorporation or affixing of unsuitable attachments or parts and in particular:—

   (a) Hiring out;
   (b) Racing and Competitions;
   (c) Adaptation or alteration of any part or parts after leaving our Works;
   (d) The attaching of a sidecar in a manner not approved by us or to an unsuitable motor cycle.

   This Guarantee shall not extend to machines whose trade mark, name or manufacturing number has been altered or removed, or in which has been used any part not supplied or approved by us, or to tyres, saddles, chains, speedometers, revolution counters and electrical equipment or to parts supplied to the order of the Purchaser and different from our standard specification.

6. Our liability and that of our dealer who sells the machine, whall be limited to that set out in this guarantee, and not other claims including claims for consequential damage or injury to person or property, shall be admissable. All other conditions and warranties statutory or otherwise and whether express or implied are hereby excluded and no guarantee other than that expressly herein contained applies to the machine to which this Guarantee relates or any accessory or part thereof.

7. We reserve the right to modify or deviate from the Published Specification without notice.

THE FITTING OF ANY COMPONENTS WHICH ARE NOT APPROVED BY THE MANUFACTURER INVALIDATES THE GUARANTEE

REPAIRS GUARANTEE

1. Whilst the highest standard of workmanship and materials is aimed at, we cannot accept liability for any defects appearing more than three months after the machine, assembly or component has left our Works after being repaired.

2. We will repair or replace at our option free of charge any defective work, materials or parts relating to the repairs carried out by us appearing within that time but shall not be under any further or other liability for any other loss or damage whether direct or consequential and our liability shall be limited to the cost of so making good. We do not undertake to bear the cost of fitting any replacement or repaired part.

3. We do not accept liability in respect of parts of proprietary manufacture, e.g. tyres, saddles, chains, speedometers, revolution counters and electrical equipment which may be used by us in effecting a repair. All other conditions and warranties statutory or otherwise express or implied are hereby excluded.

INDEX

	Page
AIR FILTER	59
ALTERNATOR	15, 23
BATTERY CARRIER	25
CARBURETOR	59
CARTON PACKS	7
CHAINGUARD	29
CHAINS	23, 41
CLUTCH	23
COIL	53
CONTACT BREAKER	21
CONTROL CABLES	49
CONTROL LEVERS	49
CRANKCASE	13, 15
CRANKSHAFT	9, 11
CYLINDER HEAD	9, 11
EXHAUST PIPES	31
FENDERS	45
FOOTRESTS	33
FRAME	25
FRONT FORKS	35, 37
FRONT WHEEL	39
GAS TANK	47
GASKET SETS	7
GEARBOX	17, 19, 21
HANDLEBARS	49
HEADLAMP	52
HORN	53
MUFFLER	31
OIL PUMP	15
OIL RELEASE VALVE	13
OIL TANK	31
PILLION FOOTRESTS	33
PISTON	9, 11
PRIMARY CHAINCASE	23
PROP STAND	29
REAR PANELS	31
REAR WHEEL	41, 43
RECTIFIER	53, 55
REFLECTORS	53
SPARK PLUGS	9, 11
SPEEDOMETER	51
STEERING RACES	35, 37
SUSPENSION UNITS	29
SWITCHES	53, 55
TACHOMETER	51
TAIL LAMP	52
TIMING GEARS	15
TIMING COVERS	17, 19, 21
TOOLKIT	57
TWINSEAT	47
VALVES	9, 11
WIRING HARNESS	53
ZENER DIODE	55

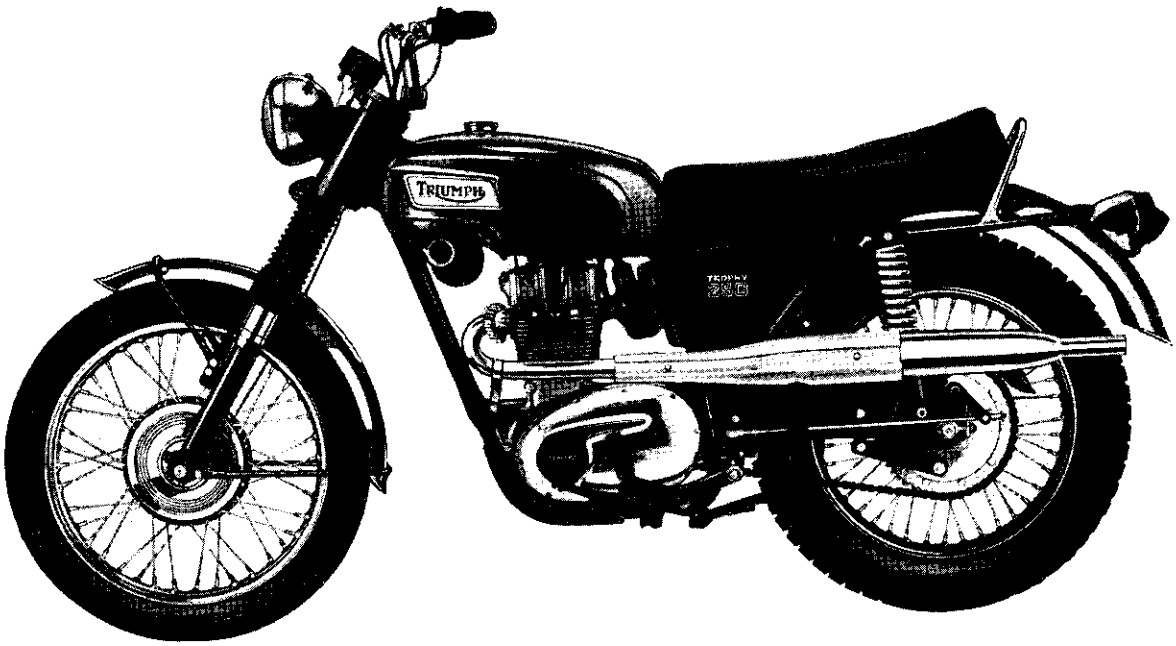

TROPHY 250 TECHNICAL DATA

Bore and stroke		67 x 70 mm.
Capacity		249 c.c.
Compression ratio		9.6 : 1
Sparking plug		Champion N3
Carburetor		Amal Concentric .928
	Choke size	28 mm.
	Main jet	160
	Needle jet	.106
	Needle	Standard
	Throttle valve	No. 3
Gearbox sprocket		15 teeth
Final Drive Sprocket		52 teeth East Coast 49 teeth West Coast
Chains	Front	$\frac{3}{8}$ in. x $\frac{7}{32}$ in. Duplex x 70 links
	Rear	$\frac{5}{8}$ in. x $\frac{1}{4}$ in. x 101 links East Coast $\frac{5}{8}$ in. x $\frac{1}{4}$ in. x 99 links West Coast
Capacities	Fuel tank	3.916 galls. U.S.
	Oil tank	6 pints
	Gearbox	$\frac{1}{2}$ pint
	Primary chaincase	$\frac{1}{4}$ pint
	Front forks (each leg)	$\frac{1}{3}$ pint
Brakes	Front and rear diameter	7 in.
Tyre size	Front	3.25 x 18
	Rear	4.00 x 18

TRIUMPH SPARES

HOW TO ORDER. Every part is indicated by a number, and this should be quoted together with the description. In order to assist customers, dimensions have been given in many cases where parts are similar. Parts where possible have been listed in order of assembly and a number of the illustrations show the assembly order also. With these aids, there should be no difficulty in identifying the parts you require.

ALWAYS HEAD YOUR ORDER WITH THE ENGINE NUMBER, STAMPED ON THE LEFT SIDE OF THE ENGINE JUST BELOW THE CYLINDER, TOGETHER WITH THE PREFIX LETTERS.

WHERE TO OBTAIN. Triumph Spare Parts can only be obtained from an authorised Triumph Dealer, and we recommend our customers to place their orders with the Triumph Dealer in their district. When parts not usually asked for are required, and for which the Dealer may have to write or obtain specially, the postage or carriage incurred becomes payable.

Customers are warned against the risk incurred by purchasing parts that are not of genuine Triumph manufacture. This risk is eliminated if parts are ordered as instructed from recognised Dealers.

PROPRIETARY GROUP

Ancillary equipment which is fitted to our motor cycles is of the highest quality and is guaranteed by the manufacturers and not by ourselves. Any repairs or claims should be directed to the actual makers or their local agents who will always give owners every possible assistance. The following are the addresses of the various manufacturers:—

CARBURETORS.
Messrs. Amal Ltd.,
Holdford Road,
Witton,
Birmingham, 6.

CHAINS.
Renold Ltd.,
Wythenshawe,
Manchester.

ELECTRICAL EQUIPMENT.
Messrs. J. Lucas Ltd.,
Gt. Hampton Street,
Birmingham, 18.

TYRES.
Dunlop Rubber Co. Ltd.,
Fort Dunlop,
Birmingham, 24.

The Avon India Rubber Co. Ltd.,
Melksham,
Wilts.

SPARKING PLUGS.
Champion Sparking Plug Co. Ltd.,
Feltham,
Middlesex.

SPEEDOMETERS.
Messrs. Smiths Industries Ltd.,
Cricklewood Works,
London, N.W.2.

SUSPENSION UNITS.
Messrs. Girling Ltd.,
Birmingham Road,
West Bromwich,
Staffordshire.

HOW TO USE THIS PARTS CATALOGUE

Consult the index on Page 3 for the parts or group of parts which you wish to locate.

List the quantities required as single units; do not ask for "2 pairs" or "3 dozen".

Items marked "reference only" are not available from the factory.

Proprietary components e.g. electrical equipment, carburetors, suspension units etc. are listed in the first column under Triumph part numbers (prefixed either D—— or 99——) wherever they are stocked at the factory. If proprietary parts are listed only under manufacturers part numbers, they are not available from the factory.

PLEASE NOTE

THROUGHOUT THIS LIST, ASSEMBLIES ARE PRINTED IN CAPITALS AND THE COMPONENTS INCLUDED IN THAT ASSEMBLY ARE INDENTED IN THE DESCRIPTION COLUMN, REVERTING TO THE ORIGINAL ALIGNMENT WHEN THE ASSEMBLY IS COMPLETE. TO ORDER THE COMPLETE ASSEMBLY IT IS NECESSARY ONLY TO QUOTE THE ASSEMBLY NUMBER. ANY COMPONENT PARTS LISTED MAY ALSO BE OBTAINED SEPARATELY IF REQUIRED.

SPECIAL WORKSHOP TOOLS

A COMPLETE LIST OF WORKSHOP TOOLS CAN BE MADE AVAILABLE BY EITHER CONTACTING YOUR DEALER OR APPLYING DIRECT TO THE DISTRIBUTOR. IN MOST CASES THESE TOOLS ARE VERY COSTLY AS THEY ARE MADE ENTIRELY FOR WORKSHOP USE, AND THEREFORE, IT IS NOT RECOMMENDED THAT THE PRIVATE OWNER PURCHASES THE TOOLS IN ORDER TO AID SERVICING THE MACHINE ONCE OR TWICE ONLY. IN THESE CIRCUMSTANCES IT IS FAR MORE ECONOMICAL TO GET IN TOUCH WITH A RECOGNISED DEALER.

UNIFIED THREAD FORM

NEW PARTS HAVING THREADED FIXINGS INTRODUCED IN THIS CATALOGUE HAVE THE UNIFIED FORM OF SCREW THREADS. THIS CHANGEOVER WILL BE CONTINUED AS AND WHEN NEW PARTS ARE INTRODUCED. EVEN WHERE PARTS ARE SIMILAR IN APPEARANCE NEW PART NUMBERS WILL BE ALLOCATED TO IDENTIFY THE UNIFIED THREADS. ALL NUTS, BOLTS AND STUDS HAVING THIS THREAD ARE IDENTIFIED BY MARKINGS. BOLTS HAVE A CIRCULAR RECESS IN THEIR HEADS, STUDS A CIRCULAR GROOVE ON THE END, AND NUTS HAVE INTERLOCKING CIRCLES ON THE SIDE.

CARTON PACK LIST

The following sub-assemblies are supplied in carton packs under the part number stated. The contents of these carton packs are preserved and will not deteriorate under adverse conditions.

PISTON (complete with rings, gudgeon pin and circlips). These are in effect 'carton pack' assemblies.

E7998	9·6 : 1 C.R.	STANDARD SIZE
E8272	9·6 : 1 C.R.	0.020 in. oversize
E8273	9·6 : 1 C.R.	0.040 in. oversize
OVERHAUL GASKET SET	99-0031	
DECOKE GASKET SET	99-0040	

PARTS VARYING FROM STANDARD SIZE

The following are the part numbers of piston rings to suit oversizes of +0.020 in. and +0.040 in. These rings are no longer available in carton packs:

PISTON RINGS	1	E8277	Top compression ring
(0.020 in. oversize)	1	E9017	Middle compression ring
	1	E9021	Scraper ring
PISTON RINGS	1	E8278	Top compression ring
(0.040 in. oversize)	1	E9018	Middle compression ring
	1	E9022	Scraper ring

Big end bearing undersizes	0.010 in.	Part Number E6068/10
	0.020 in.	Part Number E6068/20
	0.030 in.	Part Number E6068/30

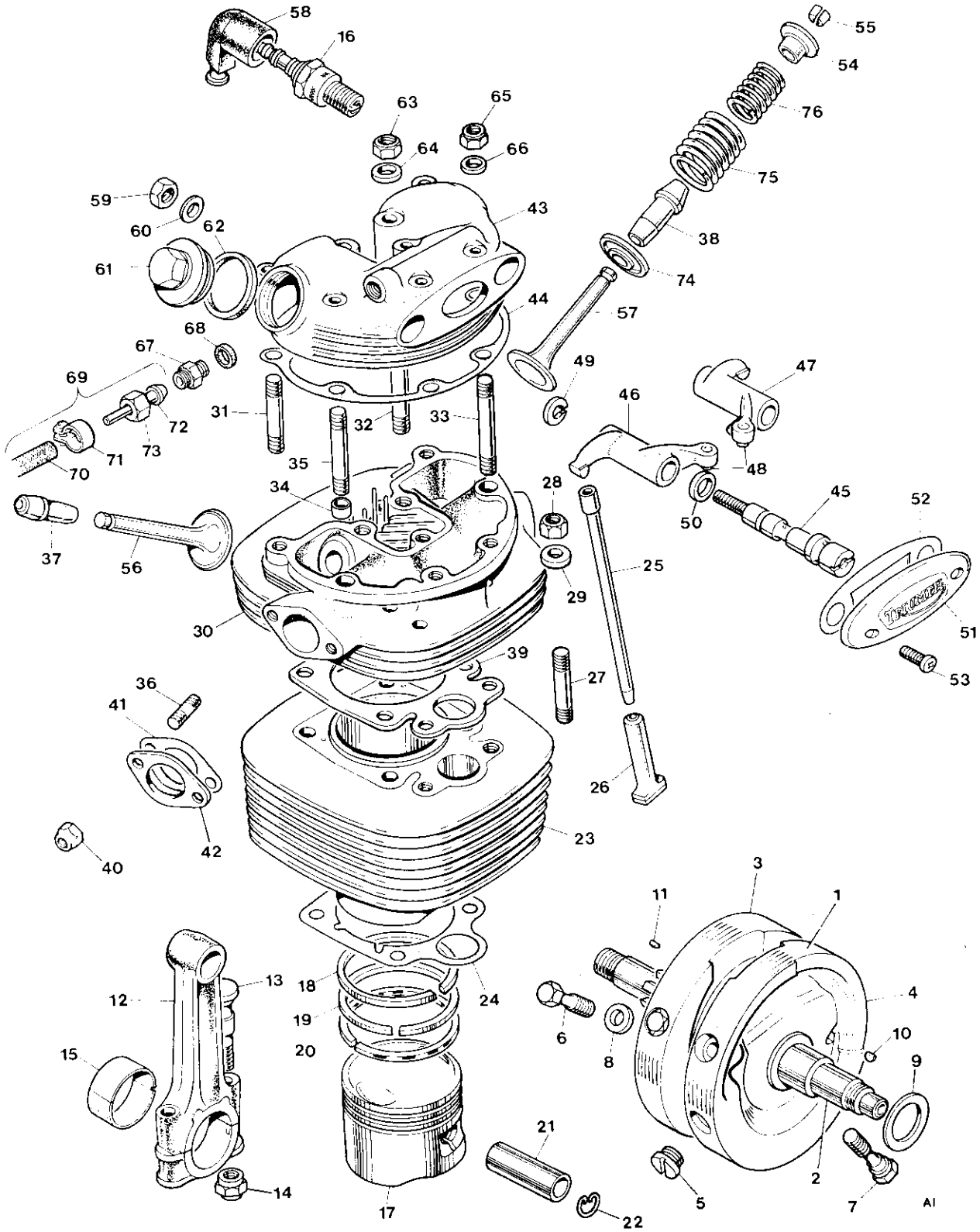

Fig. 1. CYLINDER HEAD, BARREL AND CRANKSHAFT

Ref. No.	Part No.	DESCRIPTION	QUANTITY

CYLINDER HEAD, BARREL AND CRANKSHAFT

1	E9848	CAMSHAFT AND FLYWHEEL ASSEMBLY	1
2	E9849	Crankshaft	Reference only
3	E9906	FLYWHEEL DRIVE SIDE	Reference only
4	E9907	FLYWHEEL TIMING SIDE	Reference only
5	E8036	Screwed plug	1
6	E8032	Flywheel bolts ($1\frac{1}{8}$ in. U.H.)	4
7	E8033	Flywheel bolts (2 in. U.H.)	4
8	E8037	Washer	8
9	E8038	Shim (0.010 in.)	A.R.
9	E8039	Shim (0.015 in.)	A.R.
10	E1580	Crankshaft pinion key	1
11	E8144	Rotor key	1
12	E8836	CONNECTING ROD	1
13	E3705	Connecting rod bolt	2
14	E2922	Self locking nut	2
15	E6068	Connecting rod big end bush (available in undersizes of 0·010 in., 0·020 in., 0·030 in.)	2 halves
16	D911	Sparking plug N3	1
17	E7998	*PISTON COMPLETE	1
18	E8276	Plain compression ring	1
19	E6838	Taper compression ring	1
20	E6839	Oil control ring	1
21	WE203E	Gudgeon pin	1
22	WE479	Circlip	2
23	E9263	Cylinder barrel	1
24	E7728	Cylinder base washer	1
25	E8053	Push rod (exhaust)	1
25	E8055	Push rod (inlet)	1
26	E7739	Tappet	2
27	E8008	Cylinder barrel stud ($2\frac{11}{16}$ in. O.A.)	2
28	E8196	Stud nut	2
29	E8215	Washer	2
30	E8197	CYLINDER HEAD	1
31	E8228	Stud ($2\frac{7}{16}$ in. O.A.)	2
32	E8229	Stud (3 in. O.A.)	2
33	E7996	Stud ($3\frac{1}{16}$ in. O.A.)	3
34	E8010	Dowel	2
35	E8080	Stud ($2\frac{11}{16}$ in. O.A.)	2
36	E8227	Carburetor stud ($1\frac{3}{8}$ in. O.A.)	2
37	E8225	Valve guide (inlet)	1
37	E11227	Service size valve guide + ·002 in.	1
37	E11228	Service size valve guide + ·015 in.	1
38	E8226	Valve guide (exhaust)	1
38	E11229	Service size valve guide + ·002 in.	1
38	E11230	Service size valve guide + ·015 in.	1
39	E8081	Cylinder head gasket	1
40	E8137	Carburetor stud nut	2
41	~~E8136~~ E11416	Carburetor flange washer	1
42	E7820	Distance piece	1

*Refer page 7 for oversizes.

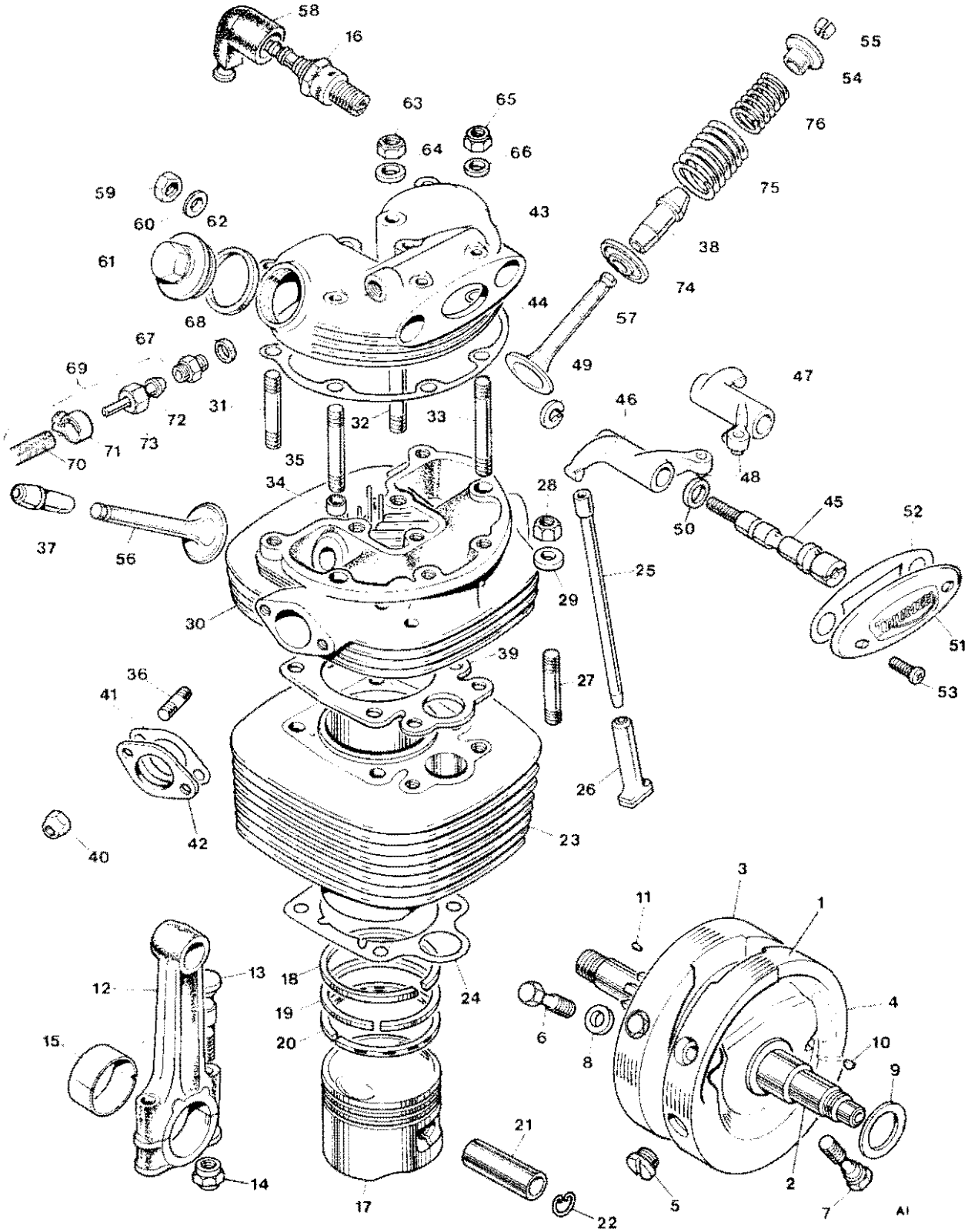

Fig. 1. CYLINDER HEAD, BARREL AND CRANKSHAFT

CYLINDER HEAD, BARREL AND CRANKSHAFT *continued*

43	E7911	Rocker box	1
44	~~E7858~~ E11426	Rocker box gasket	1
45	E7787	Rocker spindle	2
46	E7790	INLET ROCKER	1
47	E7791	EXHAUST ROCKER	1
48	E1483	Ball end	2
49	E1575	Thrust washer	2
50	E1330	Thrust washer	2
51	E8952	Inspection cover	1
52	~~E8085~~ E11425	Gasket	1
53	E8086	Screw ($\frac{11}{16}$ in. U.H.)	2
54	E11165	Top collar	2
55	E11166	Split collet	4 halves
56	E8112	Inlet valve	1
57	E7777	Exhaust valve	1
58	D1002	Plug cover	1
59	14-0403	Locknut	2
60	S25-2	Washer	2
61	E8952	Inspection cap	2
62	E8085	Washer	2
63	E8087	Nut	2
64	E8088	Washer	2
65	E8089	Nut	7
66	E8072	Washer	7
67	E8082	Union	1
68	E8083	Fibre washer	1
69	E8105	ROCKER FEED PIPE ASSEMBLY	1
70	E8106	Oil feed pipe ($26\frac{3}{4}$ in. long)	1
71	E8111	Clip	1
72	E8107	Nipple	1
73	E8110	Union nut	1
74	E8113	Bottom cup	2
75	E8114	Valve spring—outer	2
76	E8115	Valve spring—inner	2

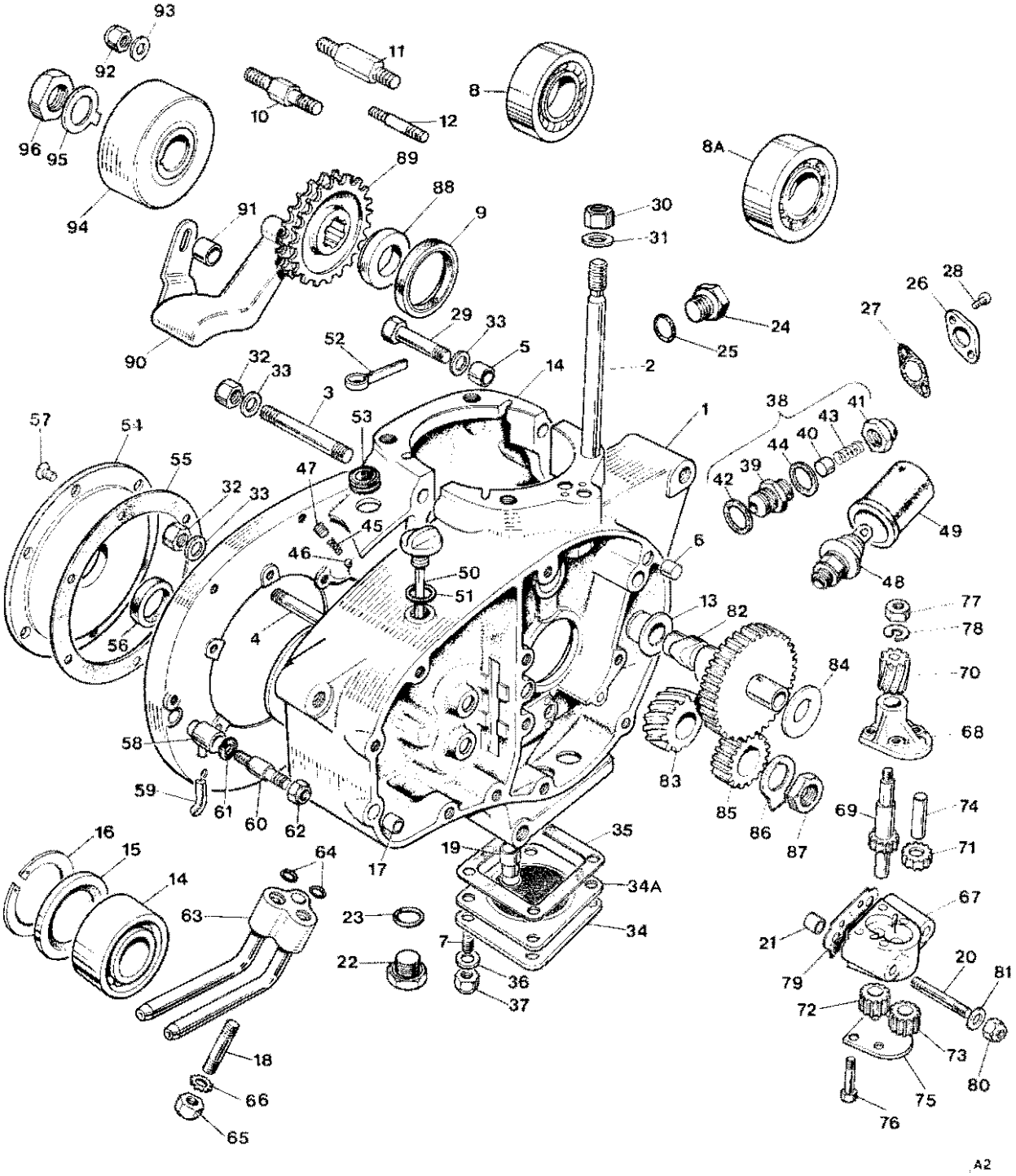

Fig. 2. **CRANKCASE**

Ref. No.	Part No.	DESCRIPTION	QUANTITY

CRANKCASE

1	E11119	CRANKCASE	1
2	E8006	Cylinder securing stud	2
3	S1889	Crankcase top stud ($2\frac{29}{32}$ in. O.A.)	2
4	S1890	Crankcase rear stud ($2\frac{11}{16}$ in. O.A.)	2
5	E8009	Hollow dowel	1
6	E8011	Solid dowel	2
7	14–1401	Sump stud	4
8	E8003	Main bearing (ball-journal)	1
8A	E9974	Main bearing (roller bearing)	1
9	E8025	Oil seal left main bearing	1
10	S1894	Generator stud rear, short hexagon ($2\frac{19}{32}$ in.)	1
11	S1895	Generator stud front, long hexagon ($2\frac{19}{32}$ in.)	1
12	S1896	Generator stud bottom ($2\frac{19}{32}$ in.)	1
13	E8315	Camshaft bush	1
14	E8014	Mainshaft bearing	1
15	E8015	Mainshaft oil seal	1
16	E6026	Oil seal circlip	1
17	E8010	Hollow dowel	1
18	S1891	Oil union stud	1
19	E8017	Scavenge pipe	1
20	S1893	Oil pump stud	2
21	E8022	Hollow dowel	2
22	S1857	Gearbox drain plug	1
23	T2697	"O" ring	1
24	S1872	Timing hole plug...	1
25	E8896	Washer hole plug	1
26	E9384	Sealing plate	1
27	E8256	Sealing washer	1
28	T1150	Screw	2
29	S1892	Bolt ($1\frac{1}{2}$ in. U.H.)	3
30	~~14–0303~~ 14-0304	Cylinder securing nut	4
31	E8135	Washer	4
32	14–0302	Nut	4
33	E8088	Washer	7
34	E8065	Sump cover	1
34A	E9979	Filter	1
35	~~E8070~~ E11424	Gasket	1
36	E8071	Plain washer	4
37	14–1901	Nyloc nut	4
38		OIL RELEASE VALVE E11327 ADDED	1
39	E7590	Valve body	1
40	~~GS251~~ E8752	Piston	1
41	E6596	Cap	1
42	~~GS254~~ E9737	Fibre washer	1
43	E11156	Main spring	1
44	~~E9737~~ E8754	Joint washer	1
45	E8124	Non-return valve spring	1
46	H2704	Valve ball	1
47	S1898	Valve screw	1
48	D2133	Oil pressure switch	Alternative

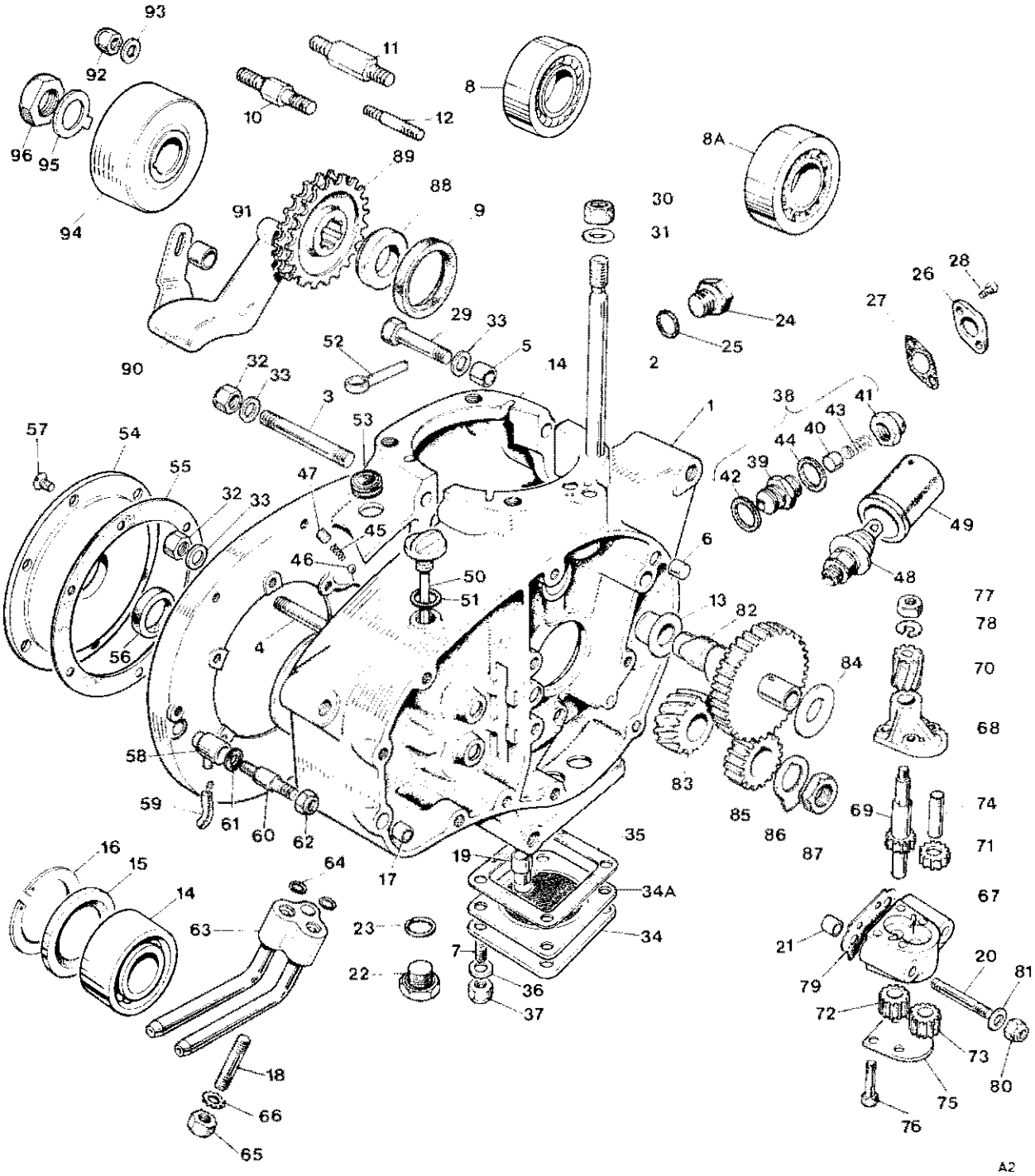

Fig. 2. CRANKCASE

CRANKCASE *continued*

49	D2045	Cover for oil switch	1
50	T2695	Dipstick	1
51	T948	Dipstick washer	1
52	E8147	Clip for alternator lead grommet	1
53	E8148	Alternator lead grommet	1
54	E3789	Oil seal housing	1
55	~~E3832~~ E11419	Gasket	1
56	E3833	Oil seal	1
57	E3821	Screw	6
58	E8179	Chain oiler	1
59	E8173	Rubber pipe	1
60	S1985	Stud	1
61	E8072	Washer	1
62	14–1901	Nyloc nut	1
63	E8127	Oil pipes and union block	1
64	E8259	"O" ring	2
65	14–0302	Union nut	1
66	E8134	Serrated washer	1
67	E11133	OIL PUMP COMPLETE	1
68	E11139	Spindle housing	1
69	E11142	Spindle	1
70	E8094	Spindle gear	1
71	E8095	Feed gear—driven	1
72	E11143	Scavenge gear—driving	1
73	E8097	Scavenge gear—driven	1
74	E11147	Driven gear spindle	1
75	E8099	Bottom plate	1
76	E8100	Screw	4
77	E8071	Spindle gear nut	1
78	F9041	Spindle gear washer	1
79	~~E8103~~ E11428	Gasket	1
80	14–1901	Holding nut	2
81	E8104	Washer	2
82	E11276	Camshaft c/w pinion	1
83	E8041	Drive gear	1
84	E9975	Distance washer	1
85	E8040	Crankshaft pinion	1
86	E8043	Lockwasher	1
87	W1798	Nut	1
88	E8140	Distance piece (·325 in. thick)	A.R.
88	E8141	Distance piece (·310 in. thick)	A.R.
88	E8142	Distance piece (·295 in. thick)	A.R.
89	E8139	Engine sprocket (23T)	1
90	E8184	Chain tensioner	1
91	E8143	Distance piece	1
92	14–1901	Nut	3
93	E8072	Washer	3
94	99–0739	Rotor (54213901)	1
95	E8224	Tab washer	1
96	E8146	Nut	1

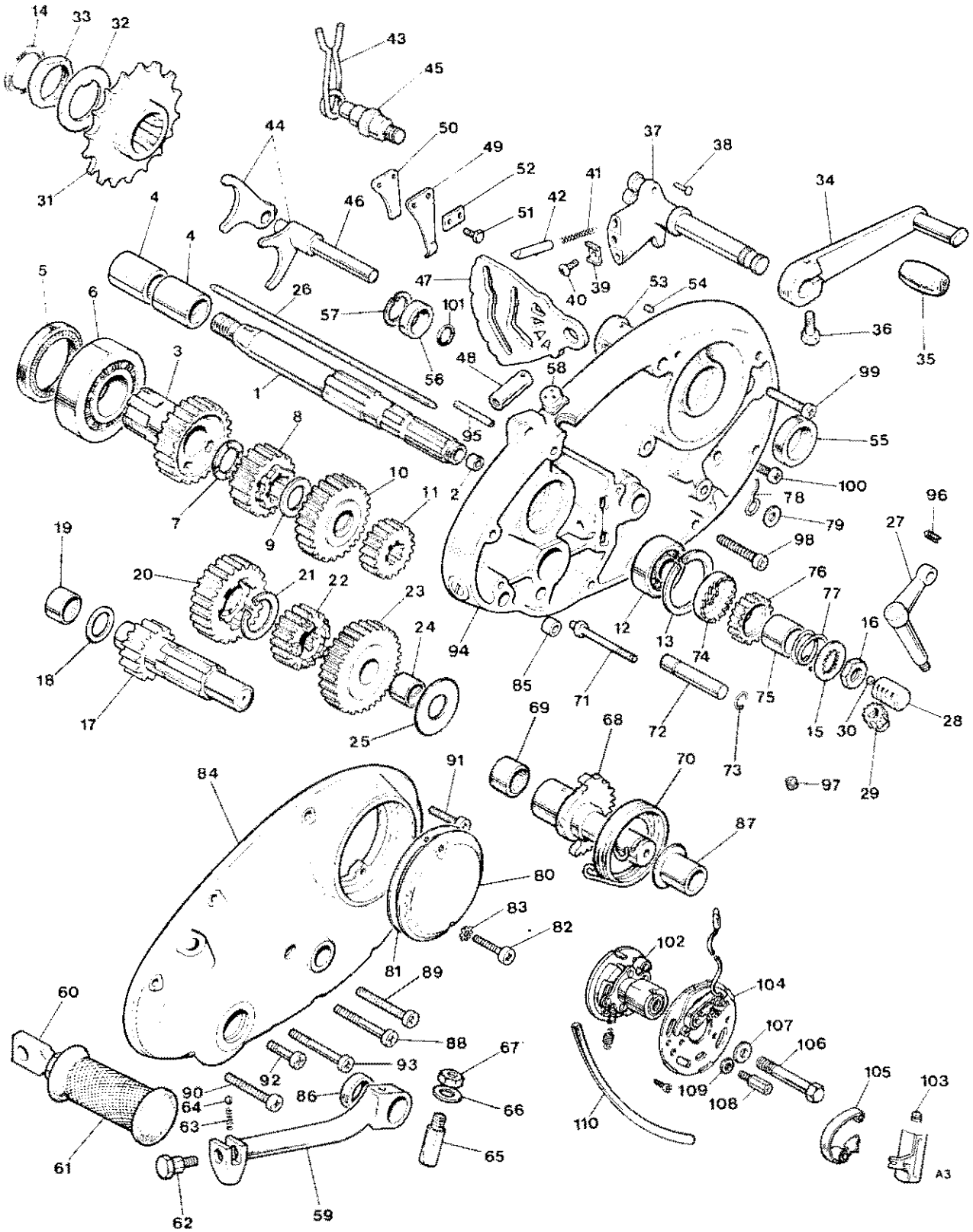

Fig. 3. GEAR CLUSTER AND TIMING COVERS

Ref. No.	Part No.	DESCRIPTION	QUANTITY

GEAR CLUSTER AND TIMING COVERS

1	T2661	MAINSHAFT COMPLETE WITH BUSH	1
2	T1391	Pushrod bush	1
3	T3872	HIGH GEAR (22T)	1
4	T2753	High gear bush	2
5	E8013	Mainshaft oil seal E/1221 SHIELD ADDED	1
6	E8014	Mainshaft bearing	1
7	T2678	Thrust washer (·093 in.)	1
7	T2679	Thrust washer (·098 in.)	A.R.
7	T2680	Thrust washer (·103 in.)	A.R.
8	T3876	Mainshaft second gear (21T)	1
9	T2664	Spacer (·075 in.)	A.R.
9	T2665	Spacer (·070 in.)	A.R.
9	T2666	Spacer (·080 in.)	A.R.
10	T2662	Mainshaft third gear (24T)	1
11	T2663	Mainshaft low gear (16T)	1
12	E8151	Mainshaft bearing	1
13	E8152	Bearing circlip	1
14	T2677	Felt washer	1
15	T2685	Lockwasher	1
16	T2686	Mainshaft nut	1
17	T2667	Layshaft and high gear (14T)	1
18	T2671	Thrust washer (·084 in.)	1
18	T2672	Thrust washer (·079 in.)	A.R.
19	E8005	Layshaft bearing	1
20	T2668	Layshaft second gear (22T)	1
21	T2669	Layshaft circlip	1
22	T3877	Layshaft third gear (19T)	1
23	T3874	LAYSHAFT LOW GEAR COMPLETE (27T)	1
24	T2752	Low gear bush	1
25	T2670	Spacing shim	1
26	T2733	Clutch push rod	1
27	T2750	Clutch lever complete	1
28	T2699	Clutch operating rack	1
29	T2700	Clutch operating pinion	1
30	E8019	Thrust ball	1
31	T2765	Gearbox sprocket (15T)	1
31	T2701	Gearbox sprocket (16T)	Alternative
31	T2766	Gearbox sprocket (17T)	Alternative
32	T2702	Tabwasher	1
33	T1434	Nut	1
34	T1164	Gear change pedal	1
35	T2450	Pedal rubber	1
36	T2703	Pedal bolt ($\frac{11}{16}$ in. U.H.)	1
37	T2692	GEARCHANGE QUADRANT	1
38	T1277	Spring rivet	2
39	T2107	Keeper plate	1
40	T2435	Screw	1
41	T2106	Spring	2
42	T2105	Plunger	2
43	T1109	Return spring	1
44	T3854	Selector fork—main shaft	1

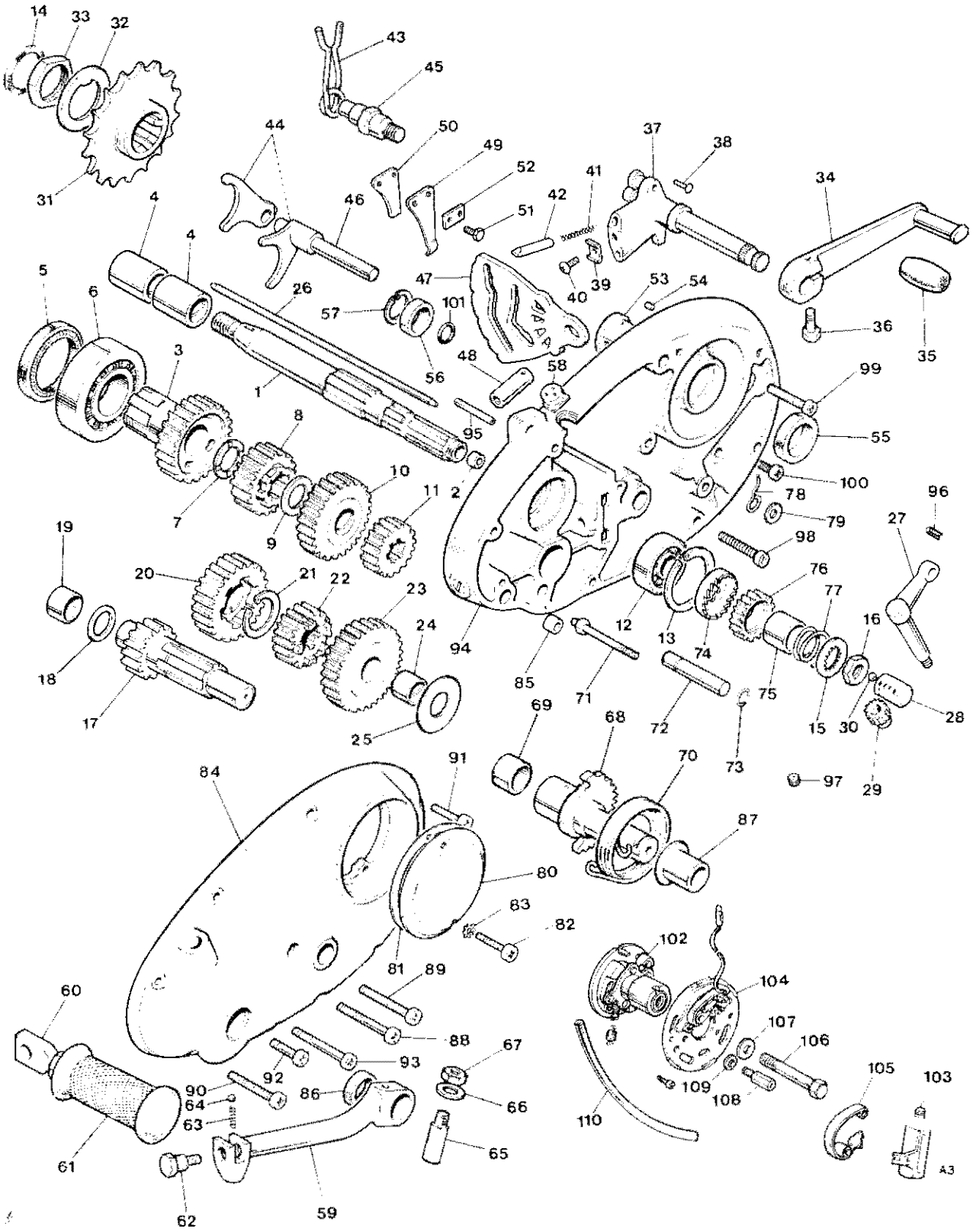

Fig. 3. GEAR CLUSTER AND TIMING COVERS

GEAR CLUSTER AND TIMING COVERS *continued*

44	T2689	Selector fork—lay shaft	1
45	T3763	Anchor bolt	1
46	T2688	Selector spindle	1
47	T3850	Camplate	1
48	~~T1069~~ T4048	Camplate spindle	1
Not illus.	D2724	Split pin	1
49	T2691	Index spring	1
50	T1249	Spring backing	1
51	T1076	Screw	2
52	T1180	Lockplate	1
53	E8150	Camshaft bush	1
54	E3172	Peg	1
55	E8153	Camshaft oil seal	1
56	E8154	Crankshaft T/S oil seal	1
57	E8157	Oil seal circlip	1
58	E8155	Cable grommet	1
59	T2763	KICKSTART CRANK COMPLETE	1
60	T2774	Kickstart folding pedal	1
61	T2330	Pedal rubber	1
62	T1169	Pivot bolt (1 in. U.H.)	1
63	T1167	Spring	1
64	H2704	Steel ball	1
65	T2704	Cotter pin	1
66	T2705	Cotter washer	1
67	T2706	Cotter nut	1
68	T4070	KICKSTART SPINDLE	1
69	E8005	Needle roller	1
70	T2687	Return spring	1
71	T3764	Anchor pin	1
72	T2657	Kickstart stop	1
73	T2658	Circlip	1
74	T2681	Kickstart ratchet	1
75	T2682	Bush	1
76	T2683	Pinion	1
77	T2684	Spring	1
78	E8172	Contact breaker clip	1
79	E8072	Washer	1
80	E8737	Contact breaker cover	1
81	~~E7882~~ E11423	Gasket	1
82	E7354	Screw ($\frac{1}{2}$ in. U.H.)	2
83	E8165	Serrated washer	2
84	E9433	OUTER TIMING COVER	1
85	E8010	Hollow dowel	2
86	T2641	Kickstart oil seal	1
87	T2642	Bush	1
88	14–6612	Outer cover screw (2 in. U.H.)	3
89	14–6611	Outer cover screw ($1\frac{3}{4}$ in. U.H.)	1
90	14–6610	Outer cover screw ($1\frac{1}{2}$ in. U.H.)	1
91	E8169	Outer cover screw ($\frac{5}{8}$ in. U.H.)	3
92	14–6606	Outer cover screw ($\frac{3}{4}$ in. U.H.)	1
93	14–6614	Outer cover screw ($2\frac{1}{4}$ in. U.H.)	1

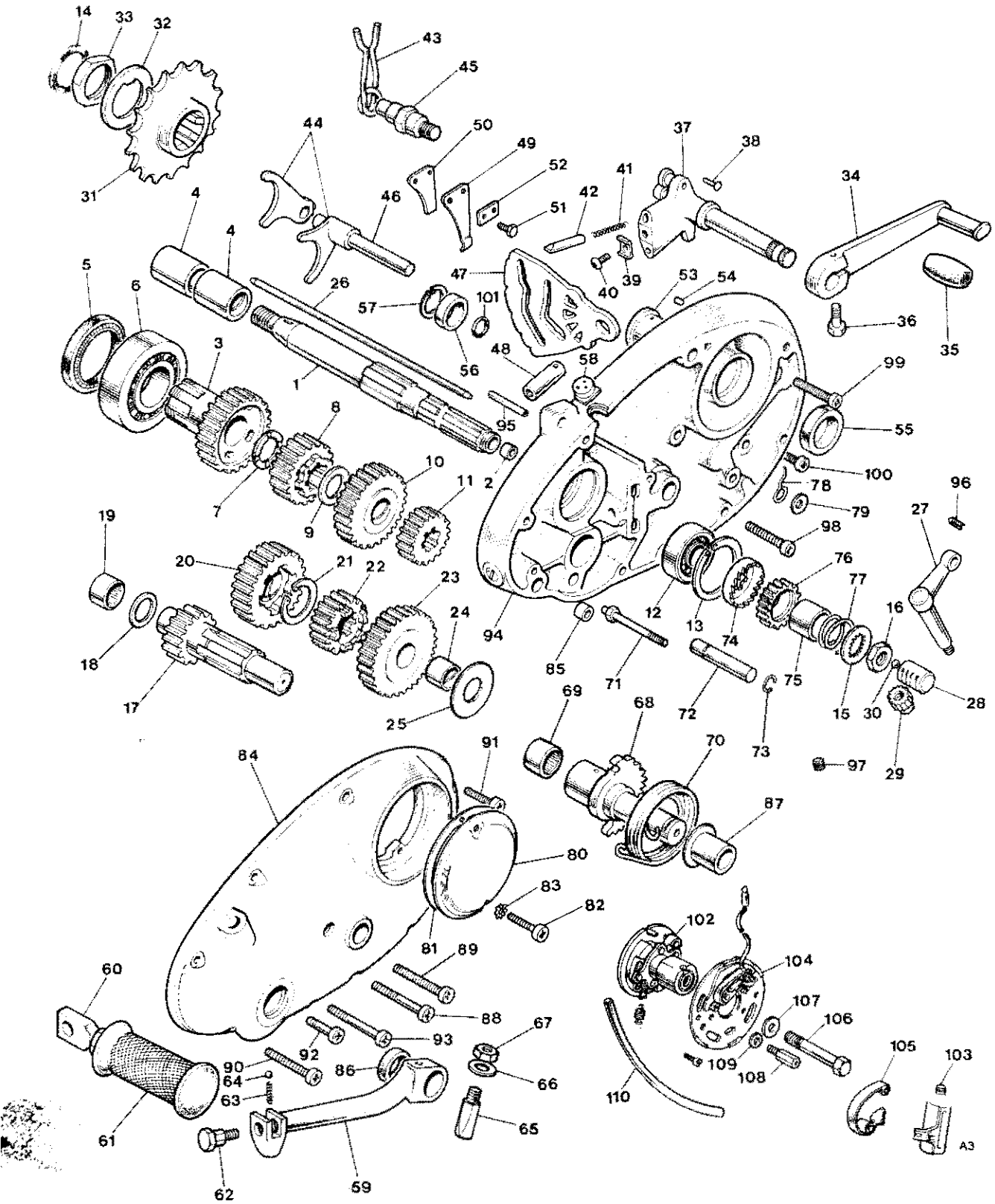

Fig. 3. GEAR CLUSTER AND TIMING COVERS

GEAR CLUSTER AND TIMING COVERS *continued*

94	E11061	Inner timing cover	1
95	T1026	Breather tube	1
96	E8162	Screwed plug	1
97	~~E9526~~	Screwed plug (socket head) DELETED	1
98	14-6608	Inner cover screw (1 in. U.H.)	1
99	14-6610	Inner cover screw (1½ in. U.H.)	4
100	14-6606	Inner cover screw (¾ in. U.H.)	2
101	E8132	"O" ring	1
102	*~~99-1056~~ 99-0764	Auto-advance unit (54416405)	1
103	D995	Condenser	1
104	~~E7788~~ 99-1008	Contact breaker	1
105	99-0072	Points (54419827)	1
106	14-0208	Contact breaker bolt	1
107	E8163	Washer	1
108	E4747	Clamp pillar bolt	2
109	E8164	Washer	2
110	E8166	Contact breaker lead sleeve	1

*Spring set only 99-1011 (54417992)

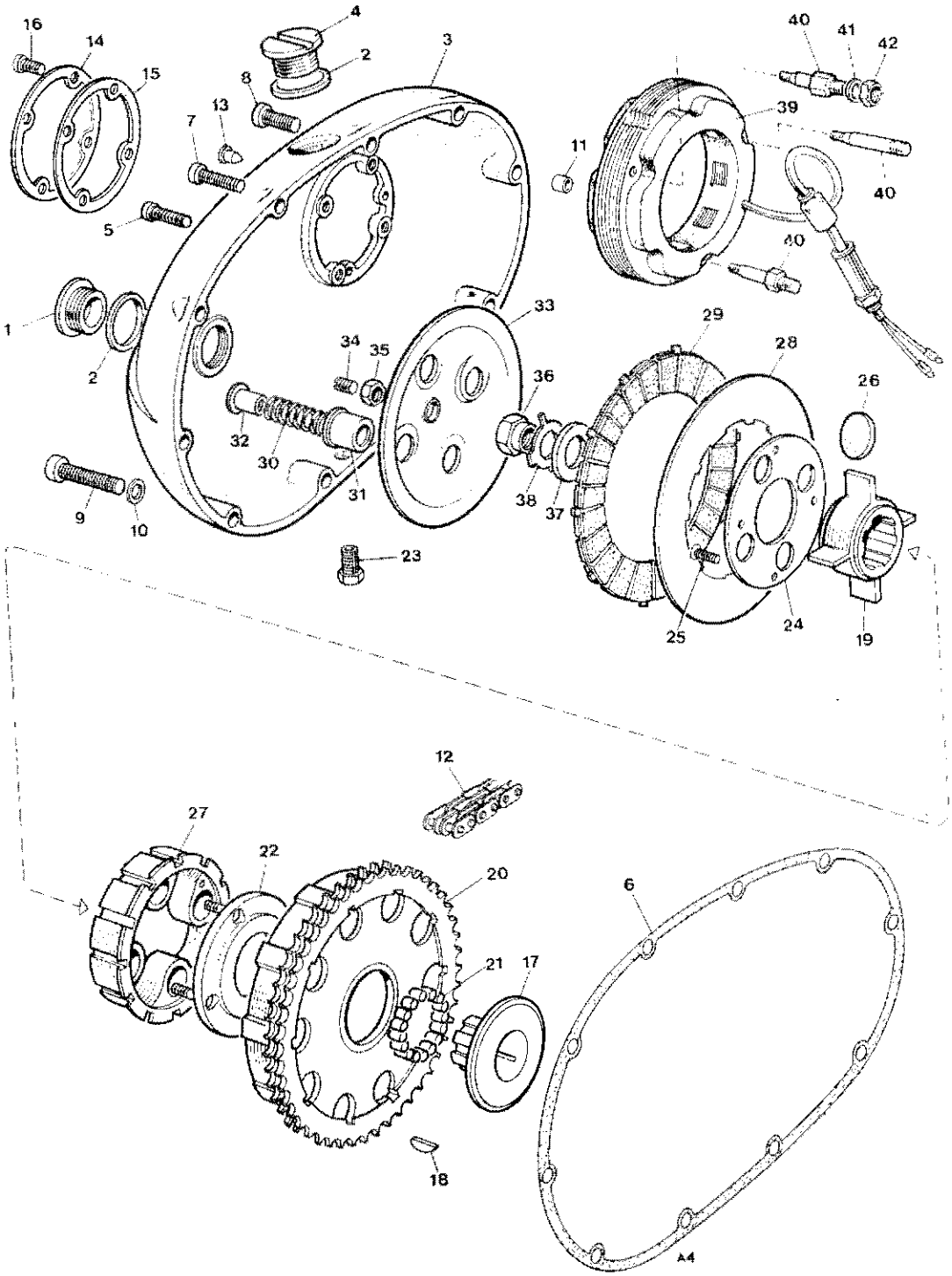

Fig. 4. CLUTCH AND PRIMARY CHAINCASE

Ref. No.	Part No.	DESCRIPTION	QUANTITY

CLUTCH AND PRIMARY CHAINCASE

1	T2166	Screwed plug	1	
2	E8782	"O" ring	2	
3	~~E11058~~ E11085	Primary chaincase cover	1	
4	E9800	Filler plug	1	
5	~~S2002~~ 14-7804	Level plug E11065 SEAL ADDED	1	
6	~~E7856~~ E11416	Chaincase gasket	1	
7	14-6611	Cover screw ($1\frac{3}{4}$ in. U.H.)	4	
8	14-6610	Cover screw ($1\frac{1}{2}$ in. U.H.)	5	
9	S1951	Cover screw ($1\frac{7}{8}$ in. U.H.)	1	
10	E8175	Washer	1	
11	E8010	Chaincase dowel	2	
12	D951	Primary chain (70L)	1	
13	E8176	Ignition pointer	1	
14	E8955	Inspection cover	1	
15	~~E8178~~ E11420	Gasket	1	
16	E8177	Screw ($\frac{1}{2}$ in. U.H.)	4	
17	T2713	Clutch hub	1	
18	T2714	Clutch hub key	1	
19	T2715	Clutch spider	1	
20	T2716	Sprocket and housing	1	
21	T2719	Roller	25	
22	T2720	Inner retaining plate	1	
23	S1943	Drain screw	1	
24	T2721	Outer retaining plate	1	
25	T2722	Screw ($\frac{15}{16}$ in. U.H.)	4	
26	T2723	Shock absorber rubber drive and rebound	8	
27	T2724	Centre	1	
28	T2725	Driven plate	5	
29	T2726	Driving plate	4	
30	T2727	Spring	4	
31	~~T3951~~ T4121	Cup	4	
32	~~T2748~~ T4212	Spring nut	4	
33	T4019	Pressure plate	1	
34	T2729	Adjuster	1	
35	F879	Locknut	1	
36	T2730	Retaining nut	1	
37	T2731	Plain washer	1	
38	T2732	Lockwasher	1	
39	99-1006	Stator (47205)	1	
40	S1894	Generator stud rear ($2\frac{19}{32}$ in.)	1	Refer Page 13 also
40	S1895	Generator stud front ($2\frac{19}{32}$ in.)	1	
40	S1896	Generator stud bottom ($2\frac{19}{32}$ in.)	1	
41	E8072	Washer	3	
42	14-0901	Nut	3	

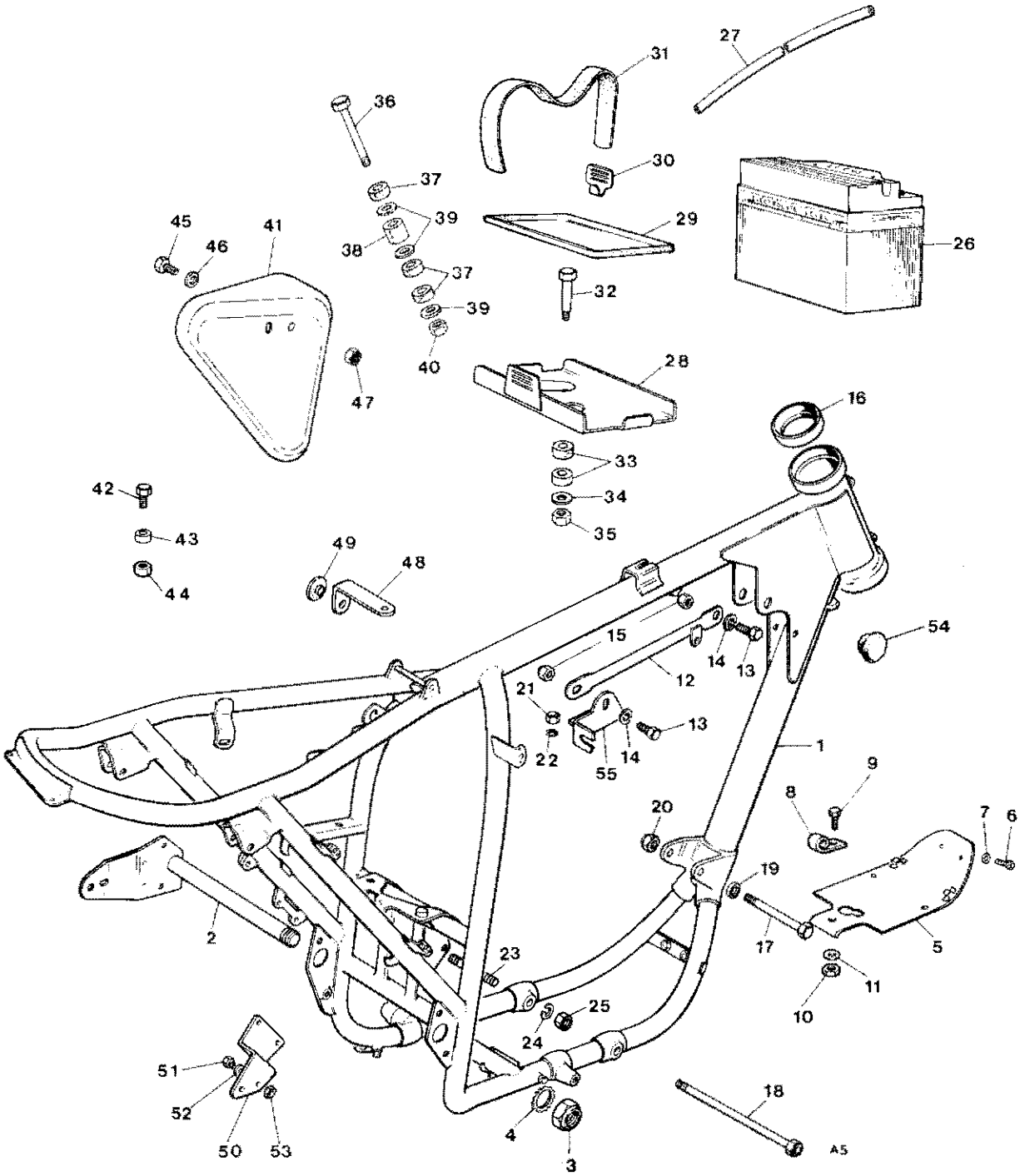

Fig. 5. FRAME COMPLETE

Ref. No.	Part No.	DESCRIPTION	QUANTITY

FRAME

1	F11607	Frame complete	1
2	F8994	Swinging arm spindle	1
3	F8995	Spindle nut	1
4	F8996	Spindle washer	1
5	F8819	Engine shield	1
6	14-0113	Bolt ($\frac{5}{8}$ in. U.H.)	2
7	E8134	Washer	2
8	F9084	"P" clip	1
9	F9023	Bolt ($\frac{11}{16}$ in. U.H.)	1
10	W1691	Nut	1
11	E8088	Washer	1
12	F9745	Engine steady stay	1
13	F5535	Bolt ($\frac{13}{16}$ in. U.H.)	3
14	S25–2	Plain washer	3
15	E8194	Nyloc nut	3
16	F8988	Ball head cup	2
17	F8984	Front engine fixing bolt ($3\frac{3}{16}$ in. U.H.)	1
18	S1934	Bottom bolt ($7\frac{1}{2}$ in. U.H.)	1
19	E8084	Spacer	2
20	E8194	Nyloc nut	1
21	E8133	Nut	2
22	E8134	Shakeproof washer	2
23	F8985	Rear stud ($2\frac{9}{16}$ in. O.A.)	1
24	F8986	Spring washer	2
25	F8987	Nut	2
26	99-0719	Battery (54027029) type PUZ5A	1
27	D980	Battery vent pipe	1
28	F8285	Battery carrier	1
29	F9003	Battery tray rubber	1
30	F9004	Hook	1
31	F9005	Battery strap	1
32	F9006	Bolt ($1\frac{7}{16}$ in. U.H.)	2
33	F9007	Mounting rubber	4
34	F9008	Washer	2
35	E8137	Nut	2
36	F9086	Bolt (3 in. U.H.)	1
37	F9007	Mounting rubber	2
38	F9087	Spacer	1
39	F9010	Washer	3
40	E8194	Nyloc nut	1
41	F9090	Tool tray c/w clips	1
Not illus.	F9157	Plug for tool tray	1
42	F9091	Bolt (·641 in. U.H.)	1
43	F9092	Spacer	1
44	F8071	Nut	1
45	F9060	Bolt ($\frac{3}{8}$ in. U.H.)	1
46	E8072	Washer	1
47	E8071	Nut	1
48	F9094	Bracket	1
49	F9093	Rubber buffer	1
50	F9945	Silencer mounting bracket	1

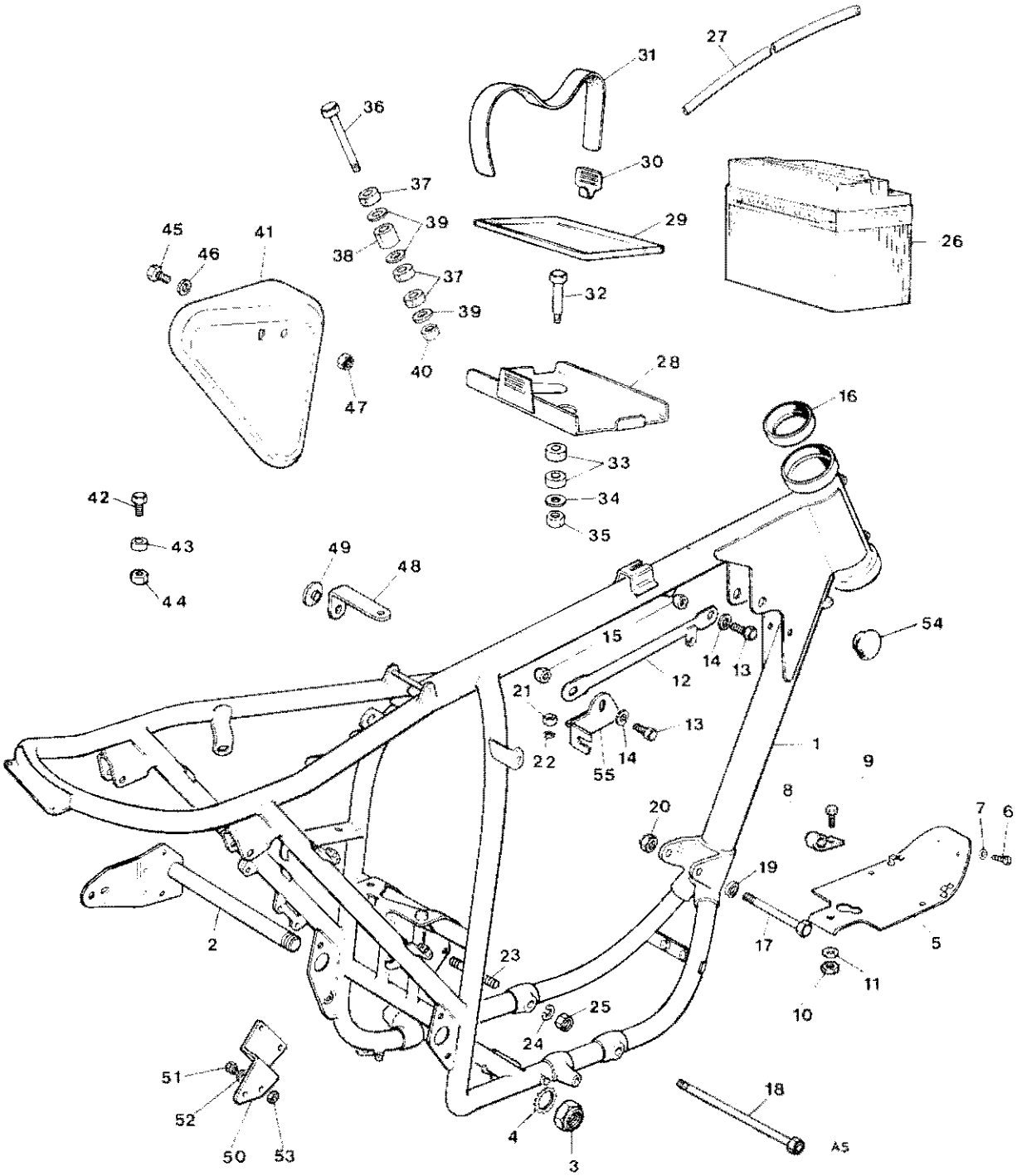

Fig. 5. FRAME COMPLETE

Ref. No.	Part No.	DESCRIPTION	QUANTITY

FRAME *continued*

51	14-0115	Bolt	2
52	W2320	Spring washer	2
53	14-0302	Nut	2
54	F9222	Tank anti roll rubber	2
55	E8189	Steady stay bracket	1
	D2452	IND. LABEL ADDED	

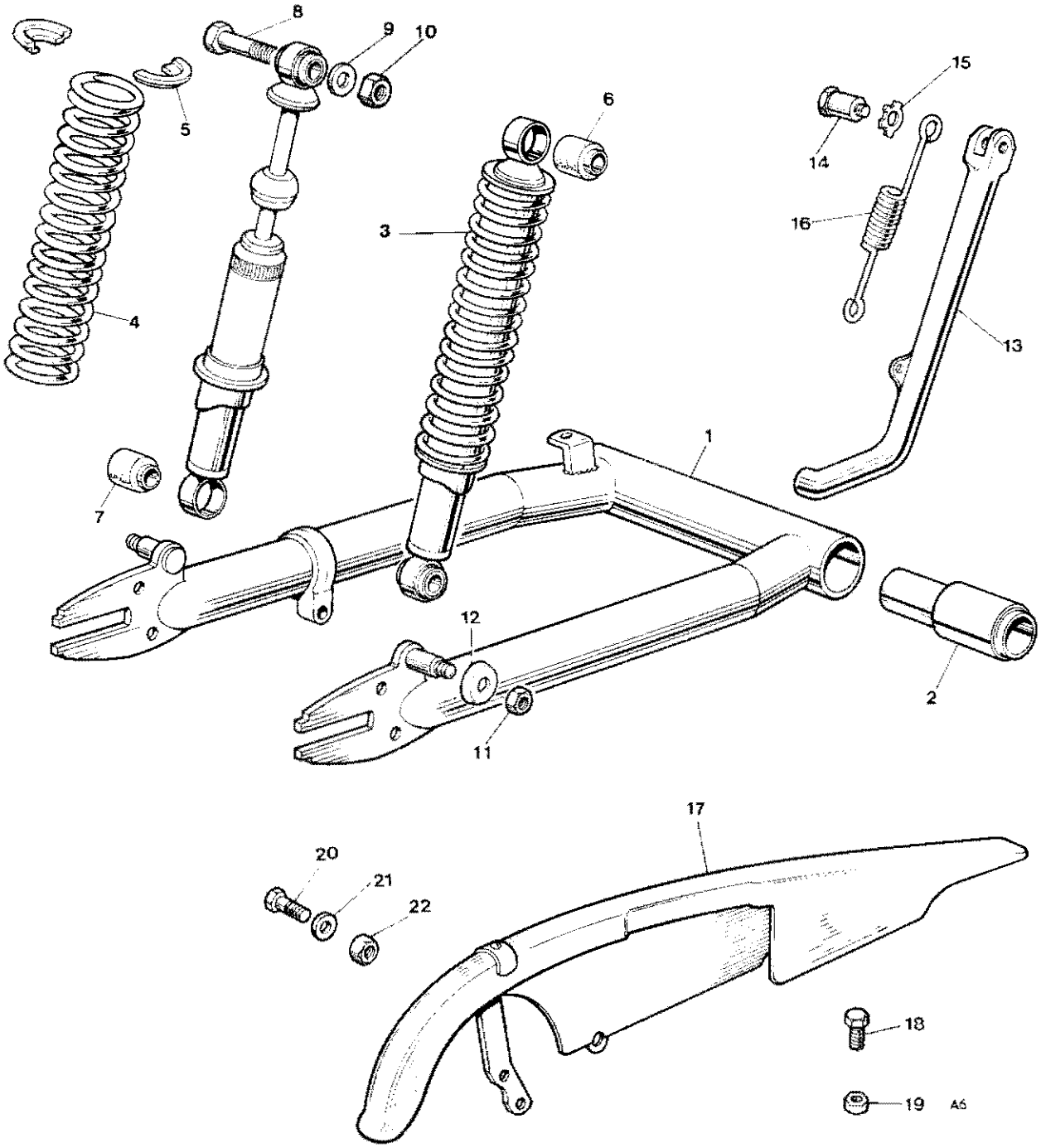

Fig. 6. SWINGING ARM AND SUSPENSION UNITS

Ref. No.	Part No.	DESCRIPTION	QUANTITY

SWINGING ARM AND SUSPENSION UNITS

1	F9210	Swinging arm	1
2	F8993	Silentbloc	2
3	D2067	SUSPENSION UNIT (64054927)	2
4	99-1057	Spring (64543626)	2
5	99-0107	Spring retainer (9054/171)	2
6	99-0122	Bonded bush—top (64533645)	2
7	99-1058	Bonded bush—bottom (64533654)	2
8	F8997	Unit fixing bolt ($1\frac{7}{8}$ in. U.H.)	2
9	F8998	Plain washer	2
10	S1–52	Nut	2
11	14-0903	Nut	2
12	F8933	Dust cover	2
13	F11606	Propstand leg	1
14	F3097	Swivel pin	1
15	F3096	Lockwasher	1
16	~~F2640~~ F11893	Spring	1
17	F9950	Chainguard	1
18	F9060	Bolt ($1\frac{15}{16}$ in. U.H.)	1
19	E8071	Nut	1
20	14-0113	Bolt ($1\frac{15}{16}$ in. U.H.)	1
21	S25–2	Plain washer	1
22	14–1902	Nut	1

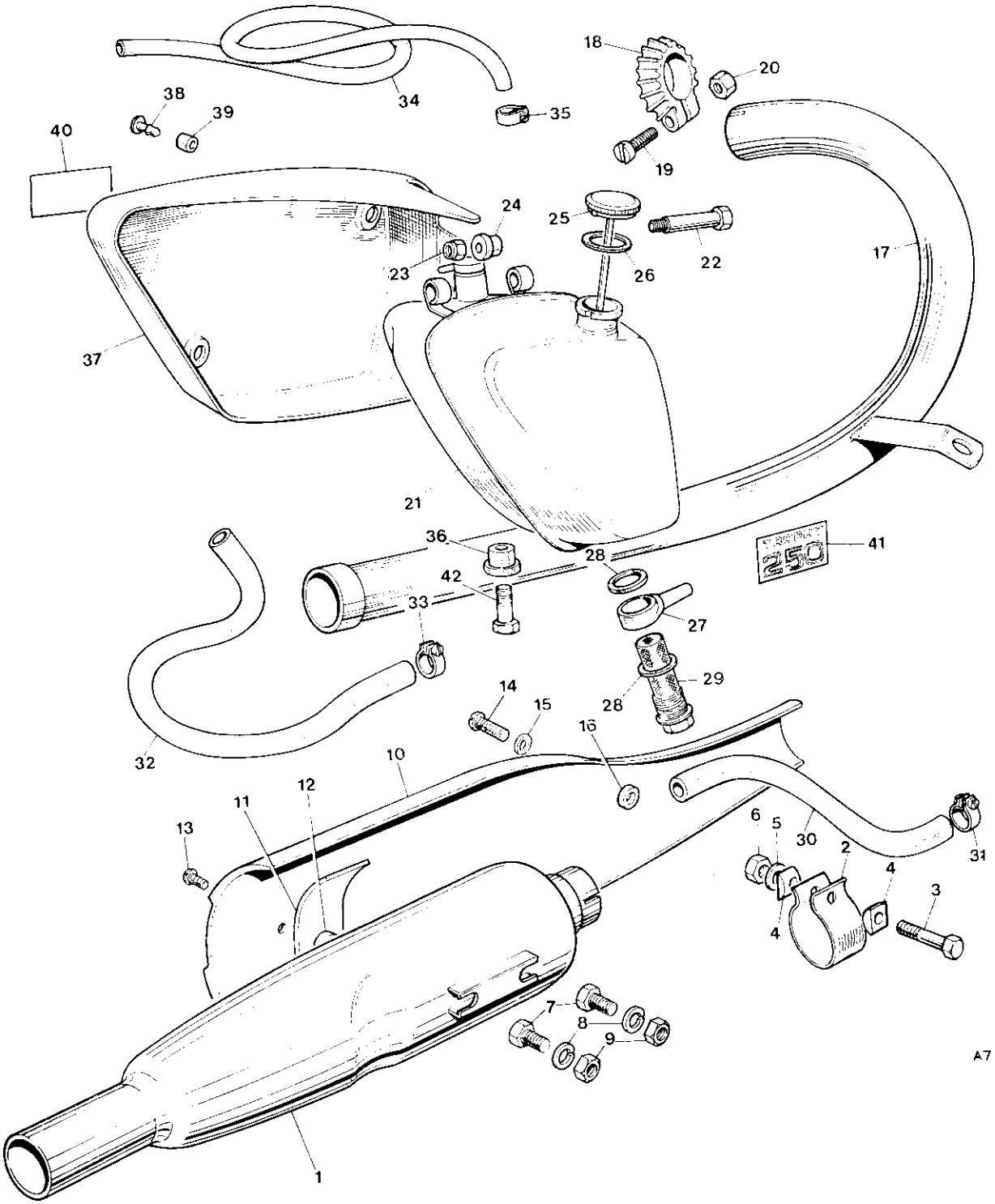

Fig. 7. OIL TANK, PANELS AND EXHAUST SYSTEM

Ref. No.	Part No.	DESCRIPTION	QUANTITY

OIL TANK, PANELS AND EXHAUST SYSTEM

1	E11181	Muffler	1
2	E2271	Fixing clip	1
3	14–0219	Bolt ($1\frac{1}{2}$ in. U.H.)	1
4	E3768	"D" washers	2
5	S26–3	Washer	1
6	S1908	Nut	1
7	F9019	Bolt ($\frac{1}{2}$ in. U.H.)	2
8	F9020	Spring washer	2
9	F879	Nut	2
10	E11221	Heat shield	1
11	~~E11222~~	Support strip DELETED	1
12	E11223	Distance piece	1
13	14–2206	Heat shield screw—rear	1
14	14–2205	Heat shield screw	2
15	S25–43	Heat shield washer	3
16	D2338	Backing washer—front	2
17	E11178	Exhaust pipe	1
18	F8976	Finned collar	1
19	F8977	Screw ($\frac{13}{16}$ in. U.H.)	1
20	F8978	Nut	1
21	F11648	Oil tank	1
22	F9067	Bolt ($1\frac{3}{4}$ in. U.H.)	2
23	F9068	Nut	2
24	F6039	Rubber sleeve	2
25	F11651	FILLER CAP C/W DIPSTICK AND WASHER	1
26	F9076	Washer	1
27	F8874	Banjo	1
28	F9070	Fibre washer	2
29	F9071	Filter	1
30	F9146	Rubber connection	1
31	F9073	Clip	2
32	F9224	Rubber connection	1
33	E5473	Clip	2
34	E8106	Rocker oil feed pipe	1
35	E8111	Clip	1
36	F9127	Rubber sleeve	1
37	F8614	Panel D/S	1
38	D1006	Oddie stud	3
39	D983	Stud rubber	3
40	D2380	Panel motif D/S	1
41	D2380	Panel motif T/S	1
42	S771	Oil tank bottom fixing bolt	1

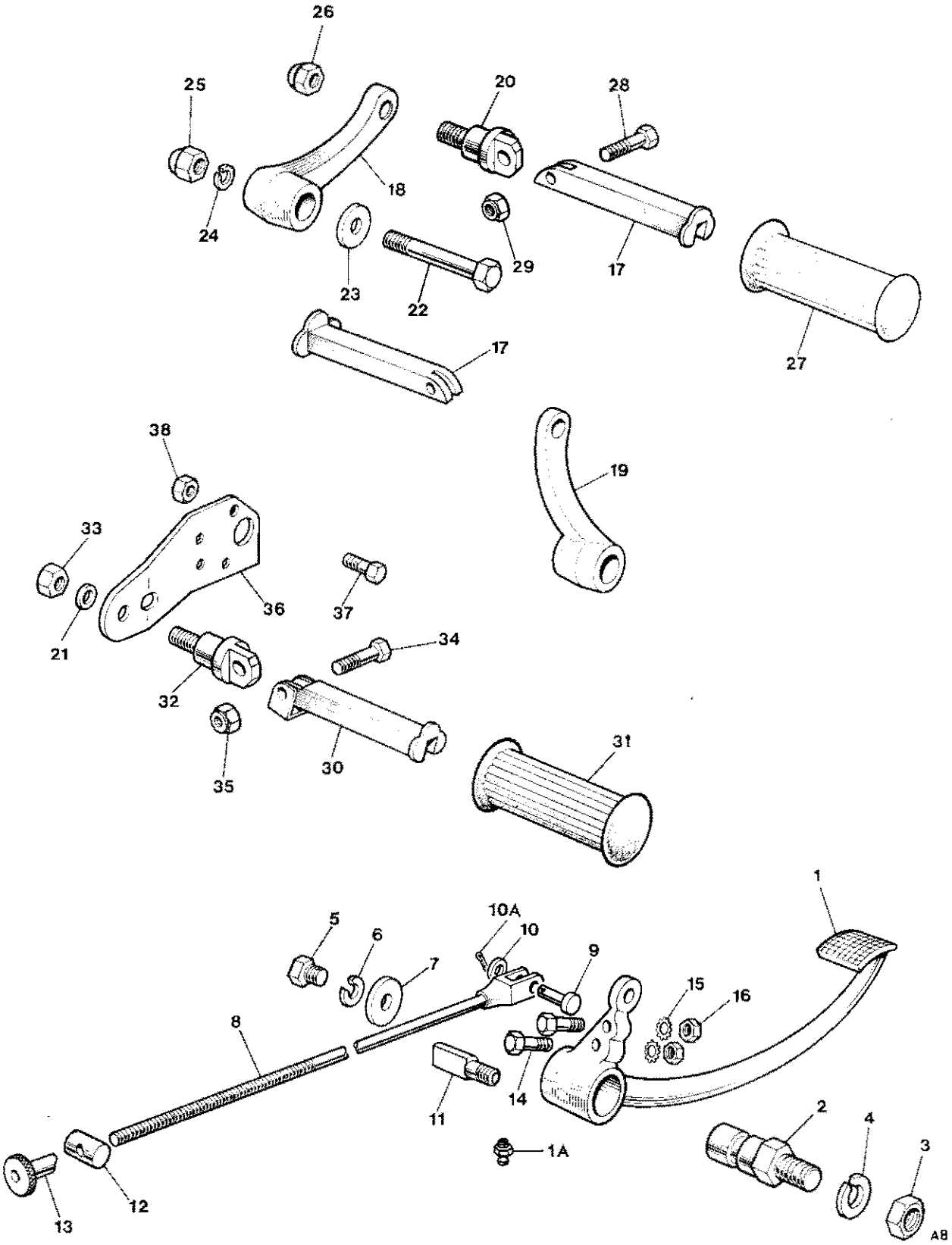

Fig. 8. FOOTRESTS AND BRAKE LINKAGE

FOOTRESTS AND BRAKE LINKAGE

1	F9031	Rear brake pedal	1
1A	W2326	Grease nipple	1
2	F9032	Fulcrum pin	1
3	F9033	Nut	1
4	F9034	Spring washer	1
5	E8193	Bolt ($\frac{3}{4}$ in. U.H.)	1
6	S26–1	Spring washer	1
7	F9035	Plain washer	1
8	F9036	Rear brake rod	1
9	WF32	Pivot pin	1
10	F8072	Washer	1
10A	D2683	Split pin	1
11	F9958	Brake pedal stop	1
12	F9038	Swivel pin	1
13	F9039	Adjuster nut	1
14	F9040	Pedal stop bolt	2
15	F9041	Shakeproof washer	2
16	F9042	Nut	2
17	F9043	Folding footrest	2
18	F11426	Footrest hanger D/S	1
19	F11428	Footrest hanger T/S	1
20	F9044	Anchor bolt	2
21	~~E8084~~ S25-2	Plain washer	2
22	F9045	Bolt ($2\frac{15}{16}$ in. U.H.)	1
23	F9046	Plain washer	1
24	F8986	Spring washer	1
25	F8987	Nyloc nut	1
26	F9085	Nyloc nut	2
27	F9051	Footrest rubber	2
28	F9057	Bolt ($1\frac{1}{4}$ in. U.H.)	2
29	F8137	Nut	2
30	F9053	Pillion footrest	2
31	F9054	Footrest rubber	2
32	F9044	Anchor bolt T/S	1
32	F9055	Anchor bolt D/S	1
33	F9085	Nut	2
34	F9057	Bolt ($1\frac{1}{4}$ in. U.H.)	2
35	E8137	Nut	2
36	F9133	Pillion footrest support bracket T/S	1
37	14–0116	Bolt	3
38	14–0702	Nut	3

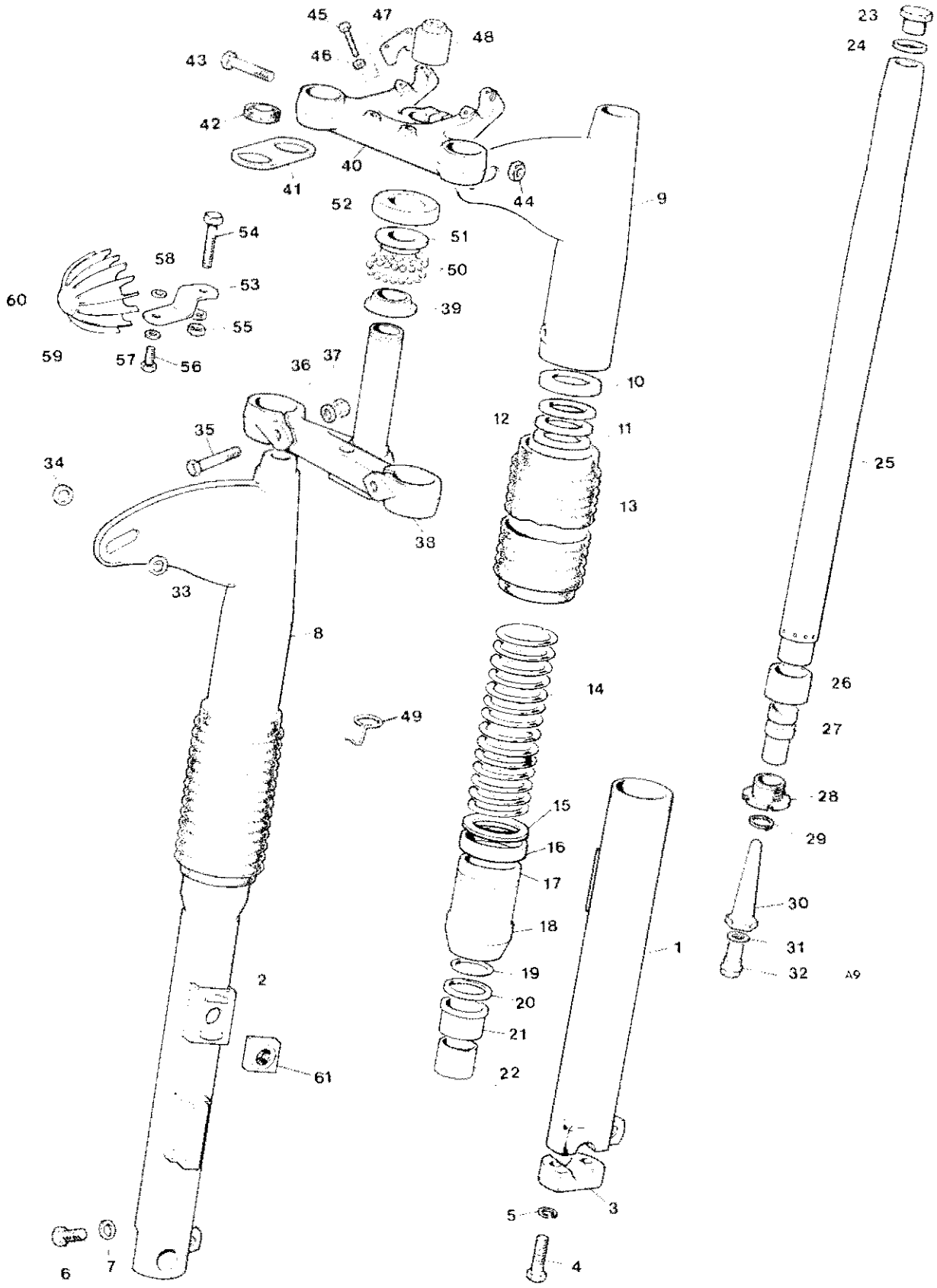

Fig. 9. TELESCOPIC FRONT FORK

Ref. No.	Part No.	DESCRIPTION	QUANTITY

TELESCOPIC FRONT FORK

	H3895	FORK ASSEMBLY	1
1	H2294	D.S. BOTTOM MEMBER C/W CAP	1
2	H2295	T.S. BOTTOM MEMBER C/W CAP	1
3	H1844	Spindle cap	2
4	~~14-0218~~ 32024	Cap bolt	4
5	~~S26-3~~ E3446	Spring washer 14-120.2 NUT ADDED. ...	4
6	H519	Drain plug	2
7	H430	Drain plug washer	2
8	H3694	Top cover T/S	1
9	H3693	Top cover D/S	1
10	H3638	Spring support	2
11	H2632	Sealing washer	4
12	H2633	Sealing washer	2
13	H2513	Gaiter	2
14	H3678	Main spring	2
15	H1656	Spring support washer	2
16	H1500	Oil seal	2
17	H3639	LOWER COVER TUBE ASSEMBLY	2
18	Reference only	Sleeve	Not supplied separately
19	H2119	"O" ring	2
20	H431	Outer washer	2
21	H441	Upper bearing	2
22	H3672	Inner sleeve	2
23	H2245	Top nut	2
24	H2653	Washer	2
25	H3906	Stanchion	2
26	H443	Lower bearing	2
27	H2154	Shuttle valve	2
28	H2091	Nut	2
29	H2127	Circlip	2
30	H2090	Restrictor	2
31	H1062	Sealing washer	2
32	H2126	Flanged bolt	2
33	H2631	Spacer	2
34	H2630	Washer	2
35	S785	Pinch bolt	2
36	S25-2	Washer	2
37	14-0303	Nut	2
38	H2526	Middle lug and stem	1
39	H2648	Bottom cone	1
40	H2525	Top lug	1
41	H2658	Cable guide bracket	2
42	H2659	Grommet	2
43	H2645	Bolt ($1\frac{9}{16}$ in. U.H.)	1
44	H2646	Nut	2
45	H2656	Bolt	4
46	F8981	Washer	4
47	H2655	Handlebar clip	2
48	H2651	Sleeve nut	1
49	H2654	Cable guide	1
50	H2704	Steering head ball	40

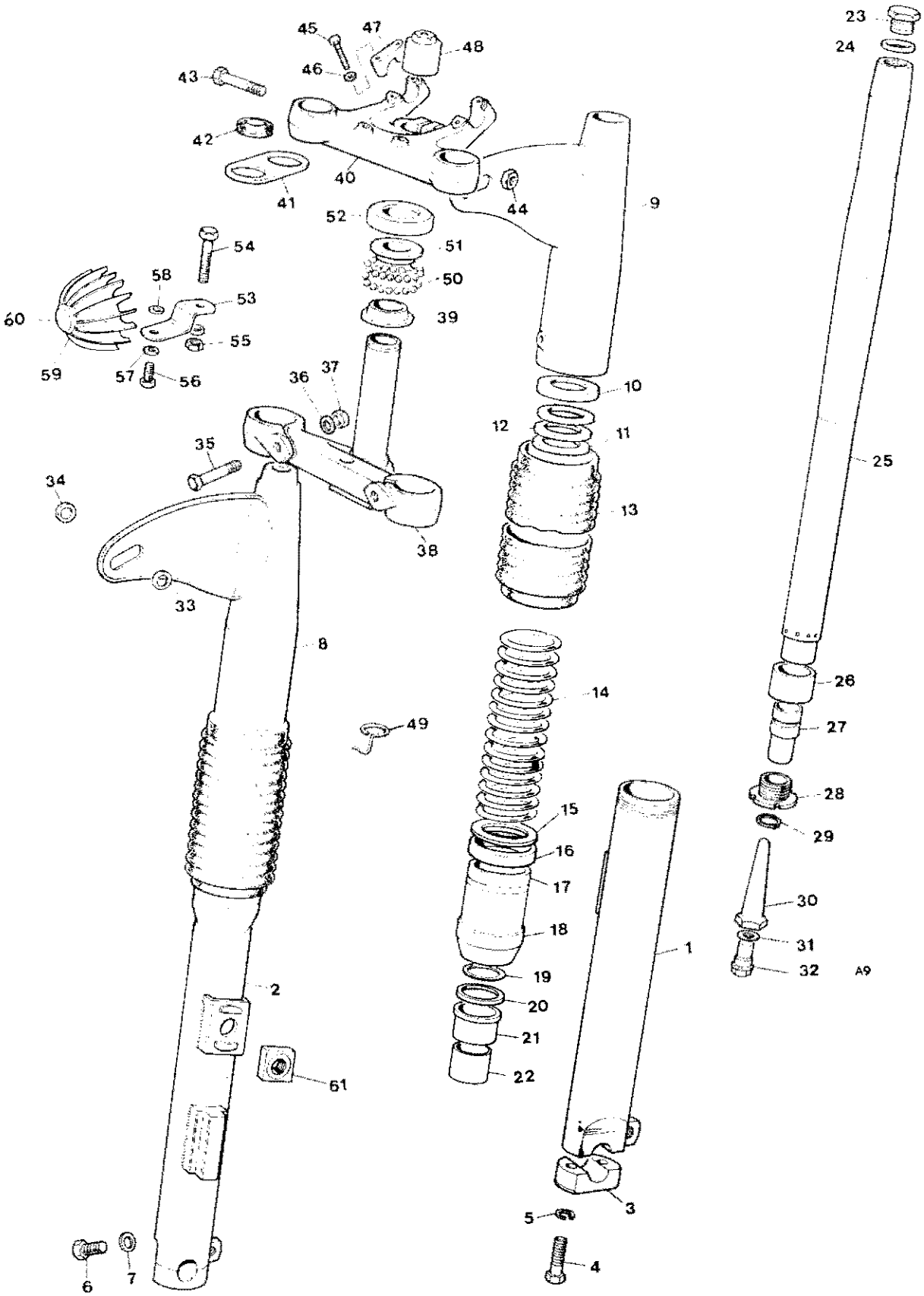

Fig. 9. TELESCOPIC FRONT FORK

TELESCOPIC FRONT FORK *continued*

51	H2647	Top cone	1
52	H2650	Dust cap	1
53	H3746	Mounting bracket	1
54	14-0218	Bolt	1
55	14-0702	Nut	1
56	14-6102	Bolt	1
57	S26–2	Spring washer	2
58	E8088	Spacer	1
59	H2237	Heat sink	1
60	H2275	Zener Diode sealing plug	1
61	H3926	Square nut	2

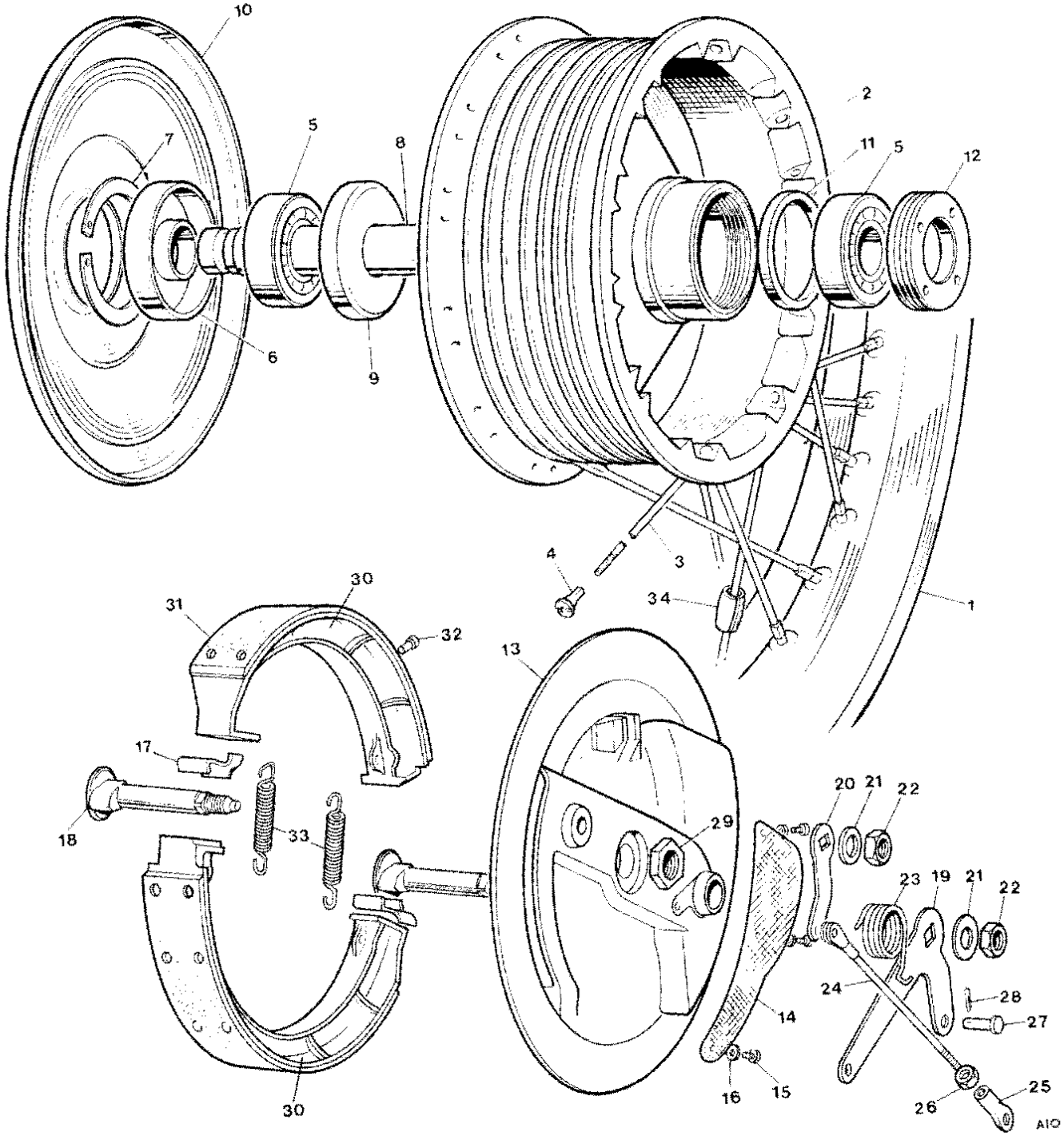

Fig. 10. FRONTWHEEL

Ref. No.	Part No.	DESCRIPTION	QUANTITY

FRONT WHEEL

	W3465	FRONT WHEEL COMPLETE	1
	W2132	RIM, SPOKES AND HUB ASSEMBLY	1
1	W1230	Rim	1
2	W3325	Hub	1
3	W2137	Spoke D/S 8 SWG x 6 in. straight	20
3	W2138	Spoke T/S 8 SWG x $5\frac{3}{16}$ in. 76°	10
3	W2139	Spoke T/S 8 SWG x $5\frac{7}{32}$ in. 100°	10
4	W2136	Spoke nipple	40
5	W653	Bearing	2
6	W1237	Dust cover	1
7	T280	Circlip	1
8	W3582	Wheel spindle	1
9	W1481	Grease cap D/S	1
10	W3443	Cover plate	1
11	W3337	Bearing support ring	1
12	W582	Bearing retainer	1
13	W3429	Anchor plate	1
14	W3444	Gauze	1
15	S1998	Screw	3
16	F2351	Washer	3
17	W2026	Brake abutment pad	2
18	W2001	Brake cam	2
19	W3453	Brake lever—front	1
20	W3454	Brake lever—rear	1
21	W2027	Washer	2
22	~~14-0403~~ 14-1303	Nut	2
23	W3522	Return spring	1
24	W3450	Brake rod	1
25	W2005	Fork end—threaded	1
26	14-0401	Locknut	1
27	WF32	Pivot pin	2
28	D2683	Split pin	2
29	S1995	Nut	1
30	W3446	BRAKE SHOE C/W LINING	2
31	Ref. only	Lining	2
32	Ref. only	Rivet	16
33	W135	Spring	2
34	W1197	Balance weight ½ oz.	A.R.
34	W1198	Balance weight 1 oz.	A.R.

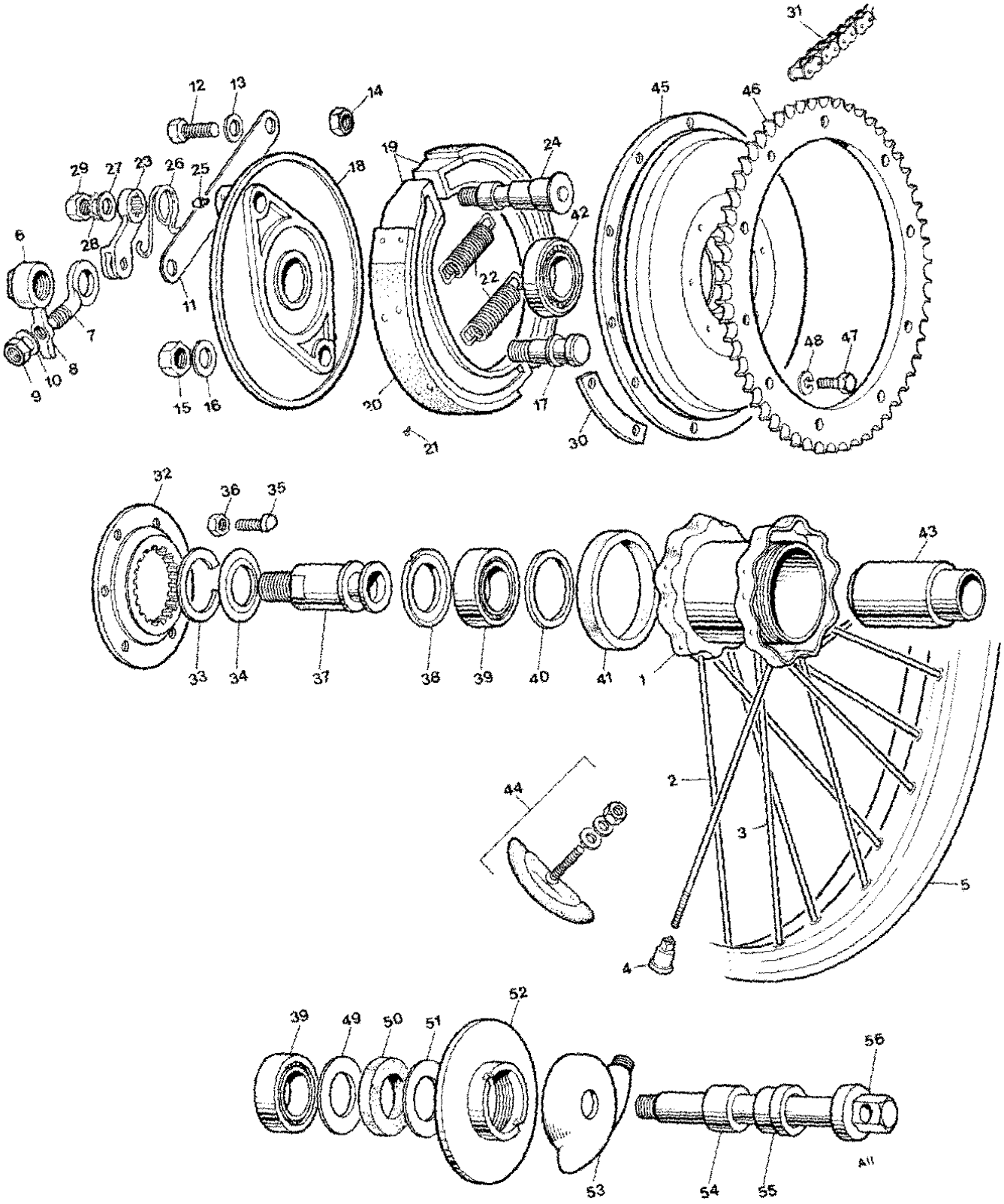

Fig. 11. REAR WHEEL

Ref. No.	Part No.	DESCRIPTION	QUANTITY	

REAR WHEEL

	W3581	REAR WHEEL COMPLETE (LESS BRAKE AND TYRE)	1 with 49 T sprocket	
	W3452	REAR WHEEL COMPLETE (LESS BRAKE AND TYRE)	1 with 52 T sprocket	
	W2290	RIM, HUB AND SPOKES ASSEMBLY	1	
1	W2297	Hub complete	1	
2	W2292	Spoke D/S	20	
3	W2293	Spoke T/S	20	
4	W2294	Nipple	40	
5	W2291	Rim	1	
6	W2309	Fixed spindle nut	1	
7	W2339	Chain adjuster	2	
8	W1015	Chain adjuster end cap	2	
9	E8137	Adjuster nut	2	
10	E8088	Adjuster washer	2	
11	W2335	Brake anchor strap	1	
12	W2336	Bolt ($1\frac{5}{16}$ in. U.H.)	1	
13	W2337	Washer	1	
14	F9085	Nut	1	
15	W2325	Fulcrum pin nut	1	
16	W2324	Fulcrum pin washer	1	
17	W2323	Fulcrum pin	1	
18	W2322	Brake anchor plate	1	
19	W2327	BRAKE SHOE COMPLETE WITH LINING	2	
20	Reference only	Brake lining	2	Not serviced separately
21	Reference only	Brake rivet	14	Not serviced separately
22	W2328	Brake shoe spring	2	
23	W2329	Brake cam lever	1	
24	W2226	BRAKE CAM	1	
25	W2326	Grease nipple	1	
26	W2334	Brake lever return spring	1	
27	W2330	Plain washer	1	
28	W2331	Shakeproof washer	1	
29	W2332	Nut	1	
30	W2317	Locking ring	3	
31	D1028	Rear chain ($\frac{5}{8} \times \frac{1}{4} \times 101L$)	1	East coast
31	D1023	Rear chain ($\frac{5}{8} \times \frac{1}{4} \times 99L$)	1	West coast
32	W2314	Driving flange	1	
33	W2312	Bearing spring ring...	1	
34	W2311	Bearing shim	1	
35	W2315	Bolt	6	
36	W2316	Nut	6	
37	W2308	Fixed spindle	1	
38	W2305	Bearing retaining ring	1	
39	W2298	Bearing	2	
40	W2299	Thrust washer	1	
41	W2313	Washer	1	
42	W2363	Bearing	1	
43	W2300	Spindle sleeve	1	
44	W3468	Security bolt WM3	2	
45	W2318	Brake drum	1	
46	W2354	Chainwheel (52T)	1	East coast
46	W2321	Chainwheel (49T)	1	West coast
47	W2319	Chainwheel bolt	10	

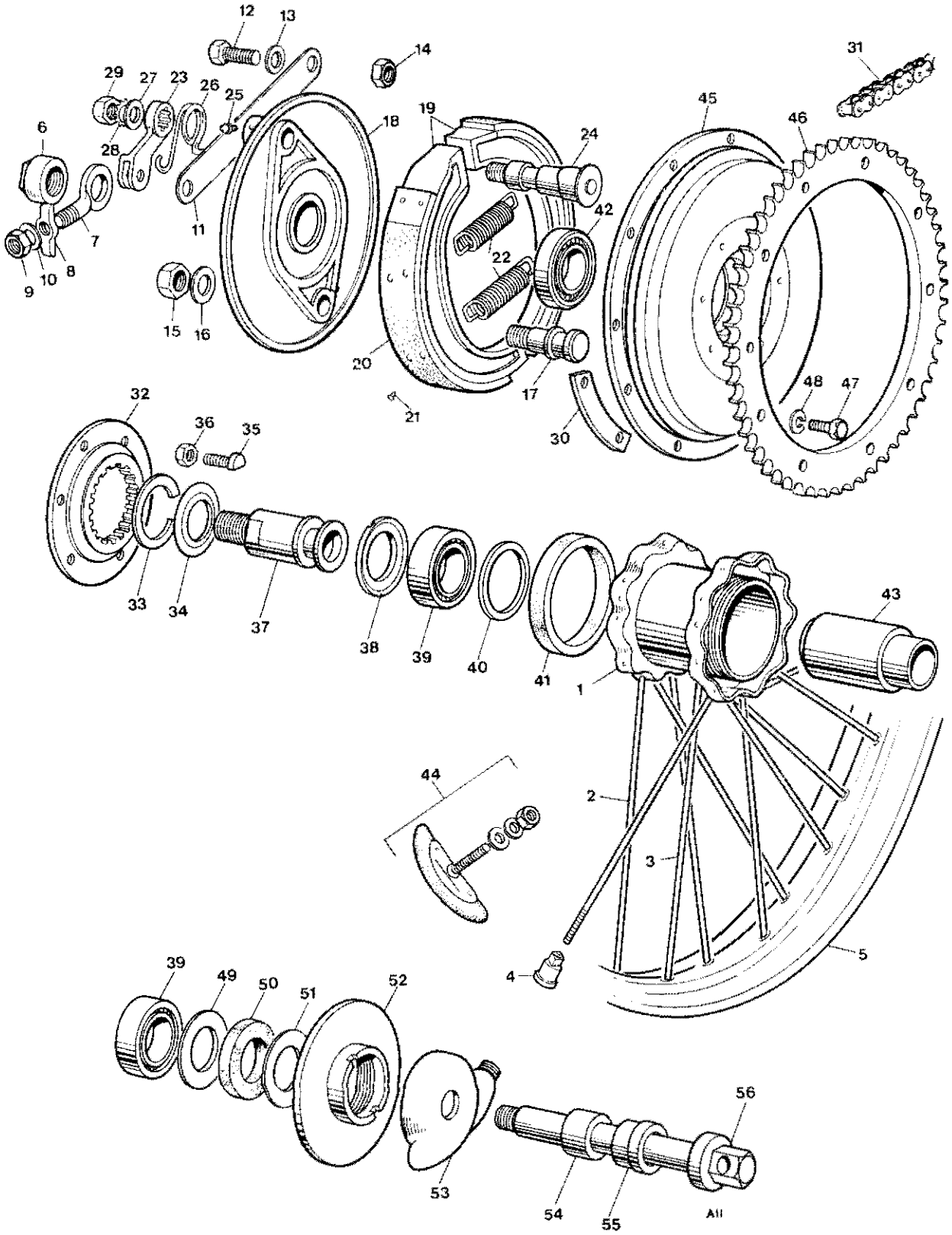

Fig. 11. REAR WHEEL

Ref. No.	Part No.	DESCRIPTION	QUANTITY

REAR WHEEL *continued*

48	W2320	Spring washer	10
49	W2302	Inner retainer	1
50	W2301	Felt washer	1
51	W2303	Outer retainer	1
52	W2304	Hub end cover	1
53	D1026	Speedometer gearbox (BG5330/31) 2 : 1	1
54	W2306	Distance collar inner O/S	1
55	W2307	Distance collar outer O/S	1
56	W2333	Hub spindle	1

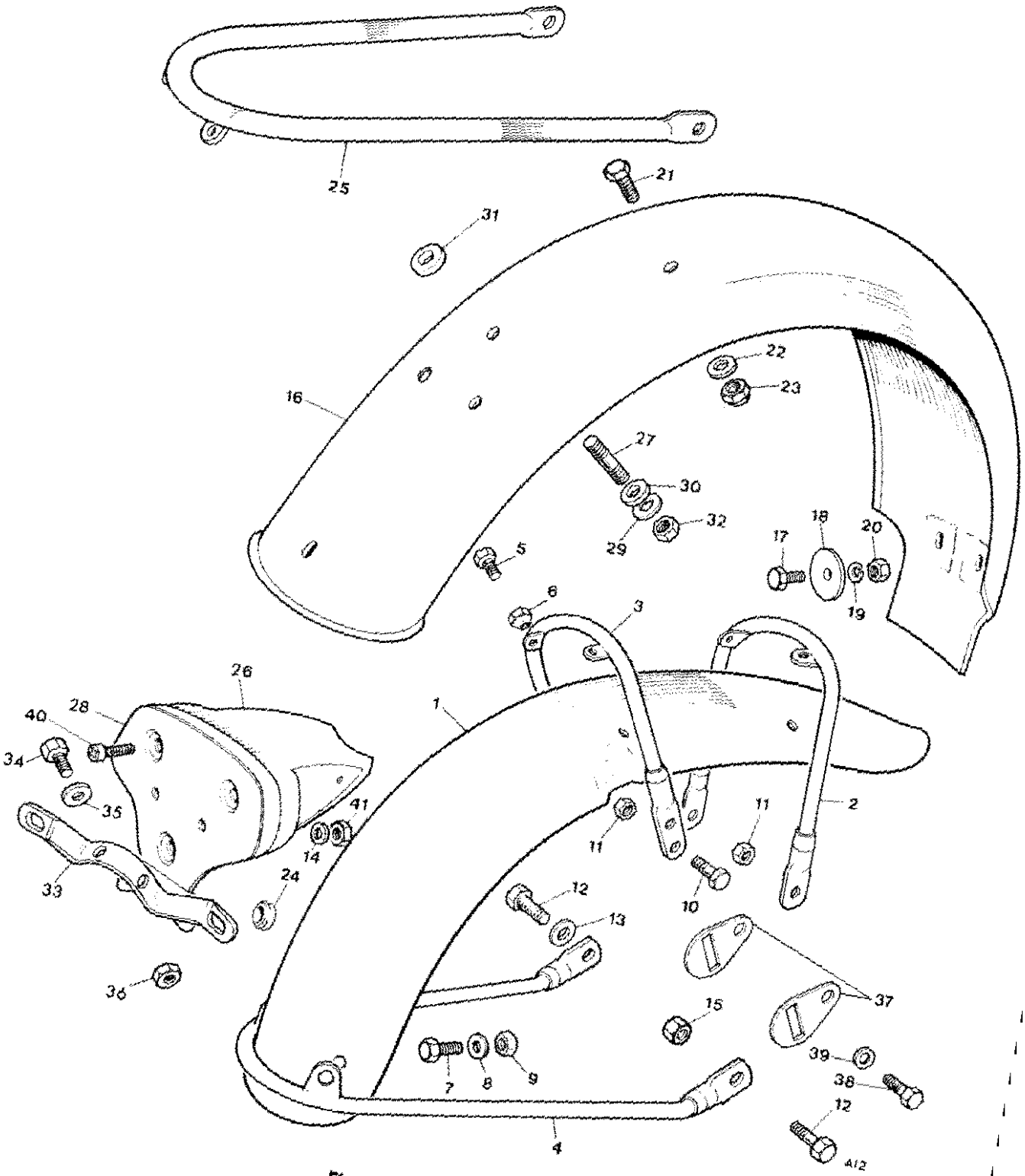

Fig. 12. FENDERS

Ref. No.	Part No.	DESCRIPTION	QUANTITY

FENDERS

1	H1674	Front fender	1
2	H1681	Front stay	1
3	H1683	Bridge stay	1
4	H3683	Bottom stay	1
5	F9019	Bolt ($\frac{1}{2}$ in. U.H.)	4
6	F9068	Nyloc nut	4
7	F9029	Bolt	2
8	E8088	Washer	2
9	W1691	Nut	2
10	F9017	Bolt ($\frac{7}{8}$ in. U.H.)	2
11	W1691	Nut	2
12	14–0114	Bolt	2
13	S25–3	Plain washer	2
14	GS299	Washer	1
15	14–0702	Nut	2
16	F9506	Rear fender	1
17	F9019	Bolt ($\frac{1}{2}$ in. U.H.)	2
18	F9027	Special washer	2
19	F9020	Spring washer	2
20	F879	Nut	2
21	F9023	Bolt ($\frac{11}{16}$ in. U.H.)	2
22	E8088	Washer	2
23	E8137	Nut	2
24	F9028	Wiring grommet	2
25	F11335	Rear fender support rail	1
26	F8139	Tail lamp support	1
27	E2980	Stud ($\frac{15}{16}$ in. O.A.)	1
28	F9132	Support plate	1
29	S25–1	Washer	1
30	F9030	Spacer	1
31	T3638	Spacer	1
32	F9068	Nut	1
33	F11529	Rear number plate bracket	2
34	F9019	Bolt ($\frac{1}{2}$ in. U.H.)	4
35	S25-1	Washer	4
36	E8071	Nut	4
37	H1685	Bracket	2
38	S1822	Bolt	2
39	F4299	Washer	2
40	F4715	Screw	3
41	S5161	Nut	1

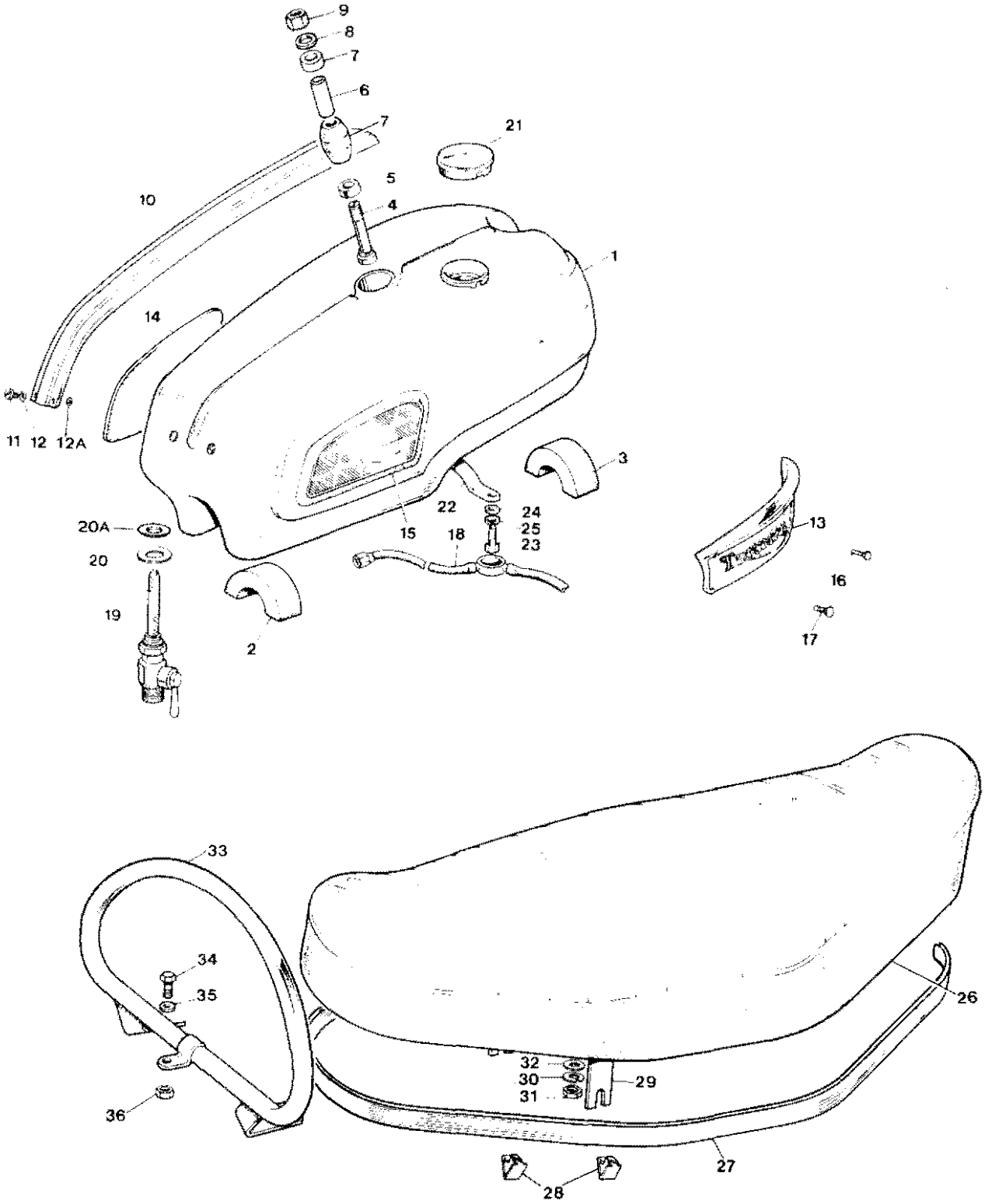

Fig. 13. GAS TANK AND TWIN SEAT

Ref. No.	Part No.	DESCRIPTION	QUANTITY

GAS TANK AND TWIN SEAT

1	F9479	Gas tank	1
2	F9690	Mounting rubber—rear	1
3	F9134	Mounting rubber—front	1
4	F10259	Bolt ($1\frac{7}{8}$ in. U.H.)	1
5	F9063	Distance tube	2
6	F10250	Distance tube	1
7	F10260	Mounting rubber	1
8	F9065	Plain washer	2
9	E8196	Nut	1
10	F9480	Trim strip	1
11	F4715	Screw ($\frac{13}{32}$ in. U.H.)	2
12	H430	Washer	2
12A	H430	Washer	2
13	F9700	Styling unit T/S	1
13	F9701	Styling unit D/S	1
14	F8192	Knee grip D/S	1
15	F8193	Knee grip T/S	1
16	F8946	Styling unit screw—front	2
17	F7888	Styling unit screw—rear	2
18	F9769	Gas line	1
19	F4971	Gas tap	1
19	F4972	Gas tap—with reserve	1
20	E7351	Gas tap washer (Stat-o-seal)	2
20A	F10002	Steel washer	2
21	F3220	Filler cap	1
22	F9744	Tie bar	1
23	S5662	Bolt ($\frac{5}{8}$ in. U.H.)	2
24	E8088	Spacer	4
25	W2320	Spring washer	2
26	F9472	Twin seat (cover F9504)	1
27	F11527	Trim strip	1
28	D697	Sprags	As required
29	F9476	Rear fixing bracket	1
30	F9020	Spring washer	2
31	E8101	Nut	2
32	S602	Plain washer	2
33	F11304	Handrail	1
34	F9023	Bolt ($\frac{11}{16}$ in. U.H.)	2
35	E8088	Washer	2
36	W1691	Nut	2

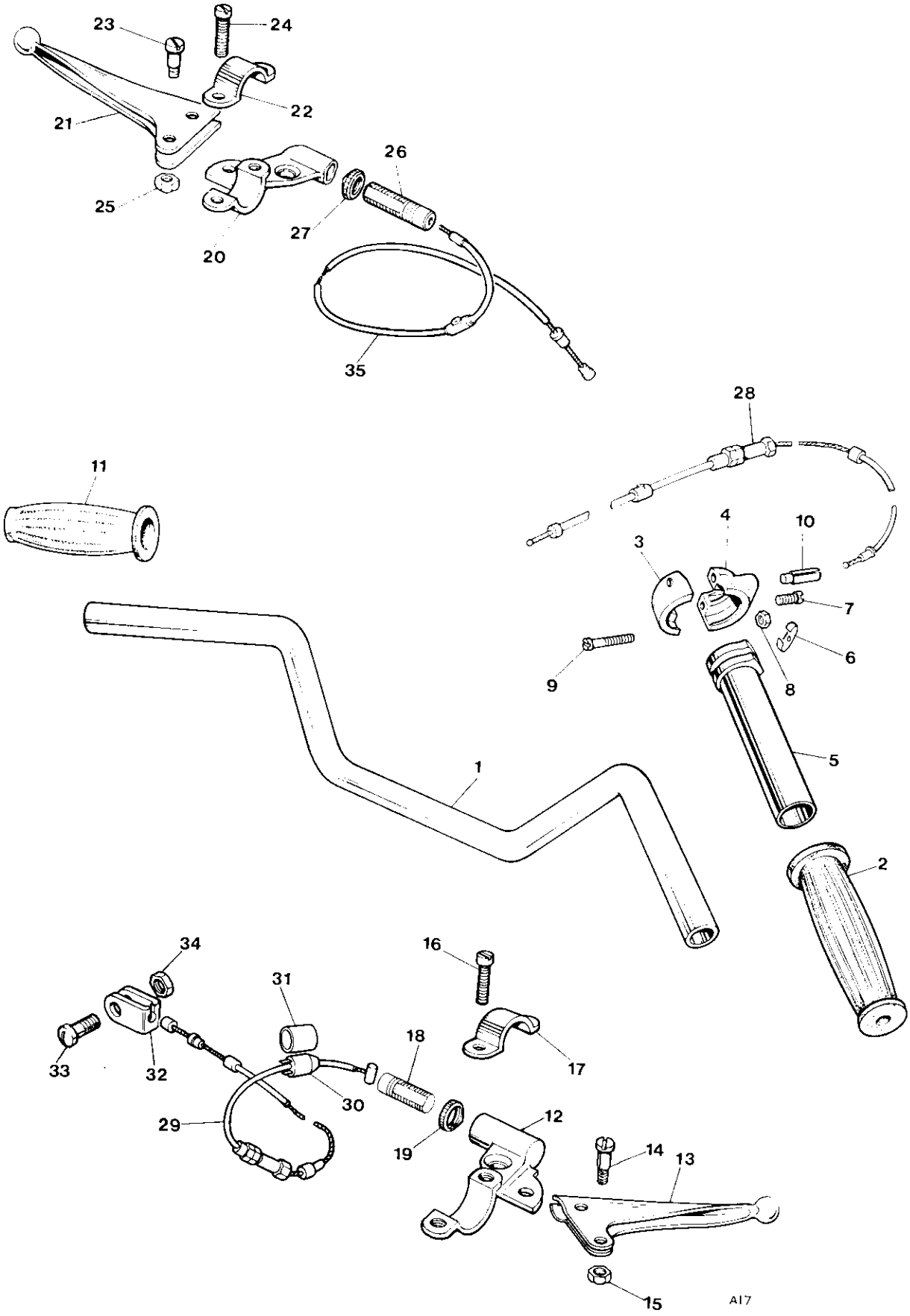

Fig. 14. HANDLEBARS, CONTROL LEVERS AND CABLES

Ref. No.	Part No.	DESCRIPTION	QUANTITY

HANDLEBARS, CONTROL LEVERS AND CABLES

1	H2628	Handlebar—Western type	1
	99–0248	TWISTGRIP (16/364)	1
2	D958	Handlebar grip	1
3	99–0245	Body top half (16/328)	1
4	99–0246	Body bottom half (16/329)	1
5	99–0244	Rotor (16/091)	1
6	99–0238	Friction spring (16/008)	1
7	99–0239	Friction spring screw (16/009)	1
8	99–0240	Nut (16/010)	1
9	99–0226	Screw (11/014)	2
10	99–0241	Cable stop (16/011)	1
11	D959	Dummy grip	1
	D2243	FRONT BRAKE LEVER (ball end) (19/1098)	1
12	99–0267	Lever bracket (19/003)	1
13	99–0262	Lever (12/754)	1
14	99–0252	Fulcrum pin (18/087)	1
15	99–0250	Fulcrum pin nut (18/053)	1
16	99–0226	Clamp bolt (11/014)	2
17	99–0230	Control clip (12/595)	1
18	99–1031	Cable adjuster (18/1708)	1
19	99–1059	Cable adjuster locknut (18/1709)	1
	D2242	CLUTCH LEVER (ball end) (18/952)	1
20	99–1126	Bracket (19/002)	1
21	99–0261	Lever (18/752)	1
22	99–0230	Control clip (12/595)	1
23	99–0252	Fulcrum pin (18/087)	1
24	99–0226	Clamp bolt (11/014)	2
25	99–0250	Fulcrum pin nut (18/053)	1
26	99–1031	Cable adjuster (18/1708)	1
27	99–1059	Cable adjuster locknut (18/1709)	1
28	D962	THROTTLE CABLE	1
29	D2034	FRONT BRAKE CABLE	1
30	D2085	Front stop switch	1
31	D2086	Rubber cover	1
32	D963	Cable toggle end	1
33	D964	Toggle end screw	1
34	D965	Toggle end nut	1
35	D2083	CLUTCH CABLE	1

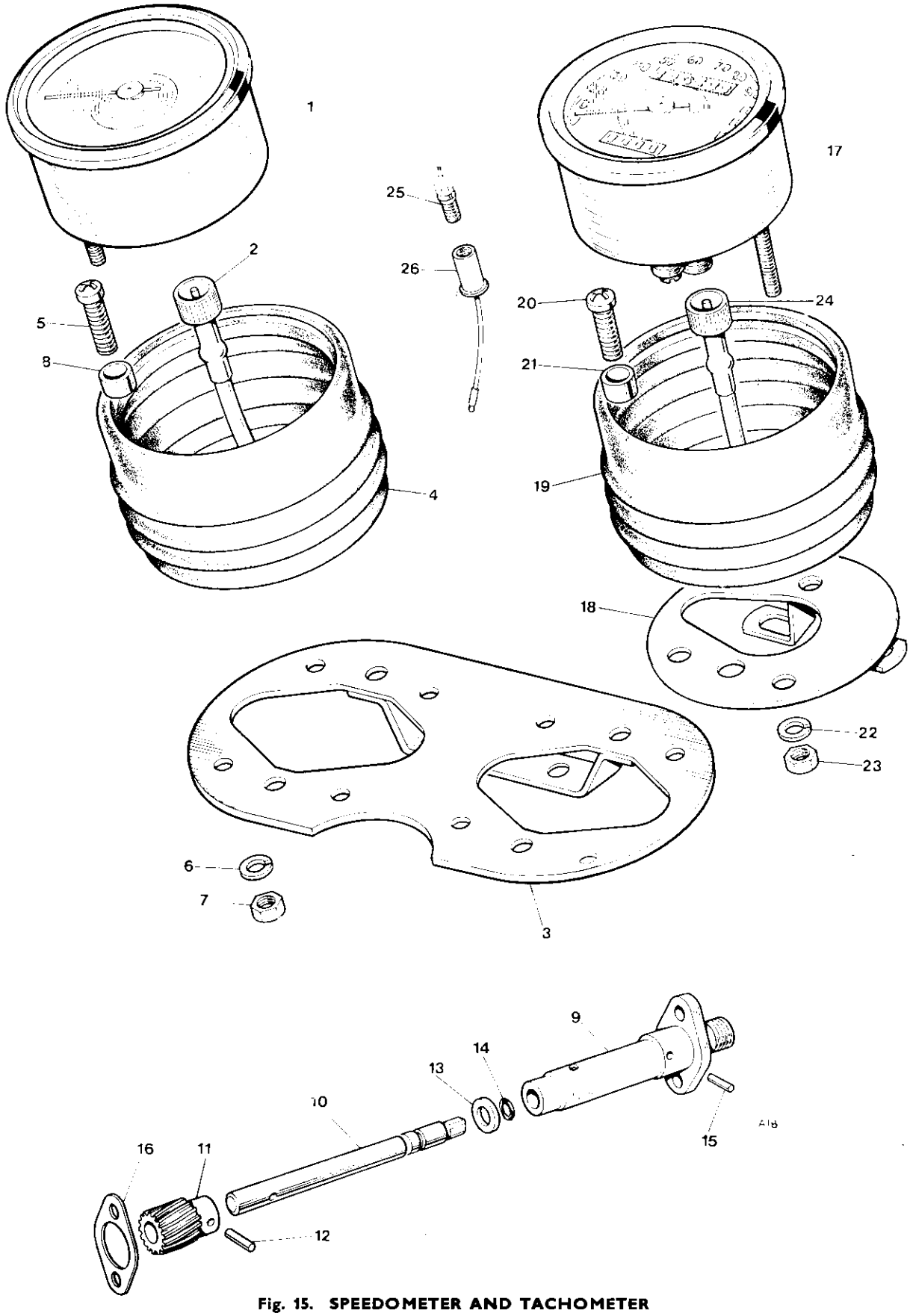

Fig. 15. SPEEDOMETER AND TACHOMETER

SPEEDOMETER AND TACHOMETER

Ref. No.	Part No.	DESCRIPTION	QUANTITY	
1	D1949	Tachometer (R.S.M. 3003/01)	1	Optional
2	D2123	Cable	1	
3	H3689	Mounting plate	1	
4	F10281	Mounting rubber	1	
5	F9171	Screw	4	
6	F9172	Washer	4	
7	F9173	Nut	4	
8	F9174	Bush	4	
—	E9428	TACHOMETER GEARBOX COMPLETE	1	
9	E9517	Drive body	1	
10	E9381	Drive shaft	1	
11	E9382	Drive gear	1	
12	E9429	Retaining pin—drive gear	1	
13	E9383	Thrust washer	1	
14	E9430	"O" ring	1	
15	E9431	Locating pin	1	
16	~~E9432~~ E11422	Joint washer	1	
17	D2296	SPEEDOMETER 125 MPH (SSM 500/03)	1	
18	F8283	Speedometer mounting plate assembly	1	
19	F10281	Speedometer mounting cup	1	
20	F9171	Screw	4	
21	~~F9174~~ F11643	Bush	4	
22	F9172	Spring washer	4	
23	F9173	Nut	4	
24	D692	Cable	1	
25	643	Bulb	2	
26	99-0695	Bulb holder (554710)	2	

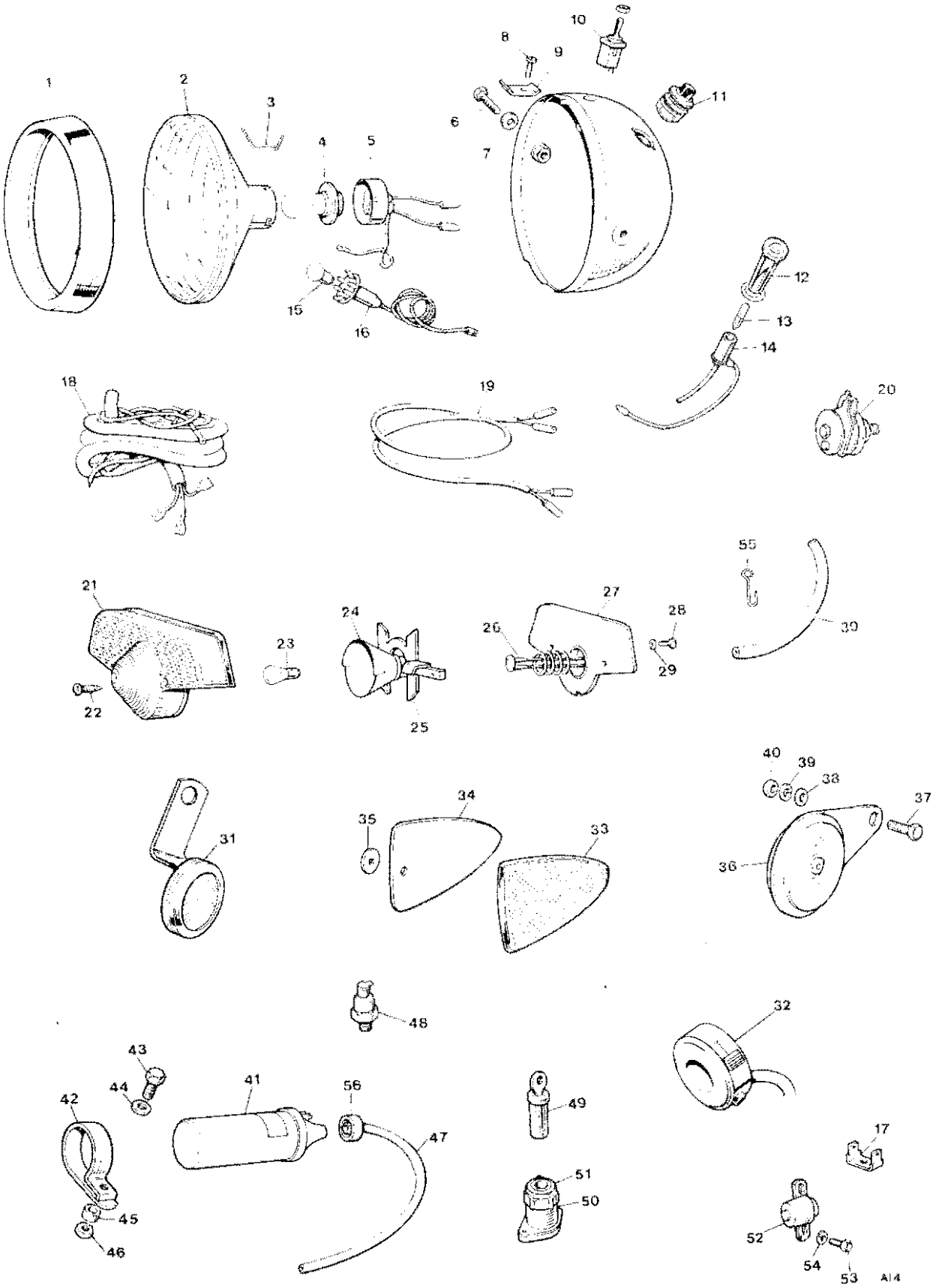

Fig. 16. ELECTRICAL EQUIPMENT

Ref. No.	Part No.	DESCRIPTION	QUANTITY

ELECTRICAL EQUIPMENT

	D2261	HEADLAMP ASSEMBLY (54052910)	1
1	99–0691	Rim (534343)	1
2	99–1041	Light unit (54524526)	1
3	99–0683	Fixing wire (504665)	6
4	99–1042	Bulb (40/27W pre-focus) (464)	1
5	99–1003	Adaptor c/w leads (54520540)	1
6	99–1004	Bolt (112201)	2
7	H1932	Spacer	2
8	144921	Screw	Ref. only
9	55408	Plate	Ref. only
10	99–0563	Lighting switch (35710)	1
11	99–0556	Dip switch (31620)	1
12	99–0568	Warning light (Red)	1
13	99–0537	Bulb (2W BA75) (281)	2
14	99–0803	Warning bulbholder (54945043)	Ref. only
15	99–0548	Pilot bulb (989)	1
16	99–0695	Pilot bulbholder (554710)	1
17	54190108	Double Lucar blade	Ref. only
18	99–1053	Harness (54955718)	1
19	Reference only	Stop-tail lead	1
20	99–0589	Rectifier c/w securing nut	1
	99–0597	STOP AND TAIL LAMP ASSEMBLY (53973)	1
21	99–0781	Lens (54572932)	1
22	99–0698	Screw (572289)	2
23	99–0542	Bulb (6/21W offset pin) (380)	1
24	54574348	Bulbholder with reflector	Ref. only
25	54578213	Bracket	Ref. only
26	573828	Contact assembly	Ref. only
27	99–0780	Gasket (54571677)	1
28	F4715	Screw	2
29	GS299	Washer	2
30	F8307	Stop and tail lamp lead tube	1
31	F8972	Front reflector c/w bracket	2
32	F8318	Ducon horn push (WIPAC 16714)	2
33	F8273	Rear reflector	2
34	F8140	Rubber washer	2
35	F8195	Push-Fix	4
36	D992	Horn	1
37	F5535	Bolt	1
38	E8191	Washer	1
39	E8084	Spring washer	1
40	E8194	Nut	1
41	D2240	Coil (45221)	1
42	F11603	Coil support clip	1
43	14–0204	Bolt ($1\frac{5}{8}$ in. U.H.)	1
44	S602	Washer	1
45	F11578	Distance piece	1

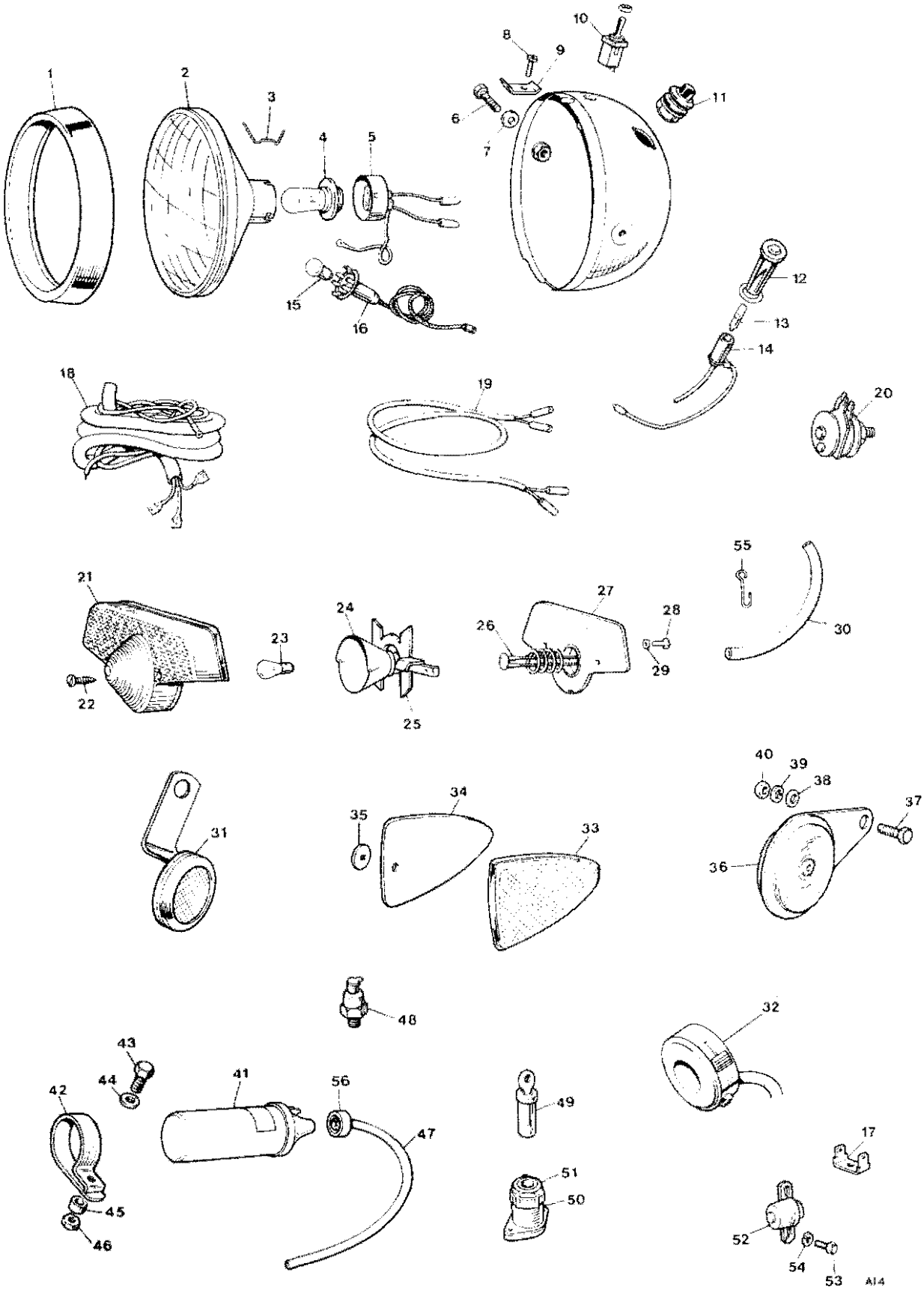

Fig. 16. ELECTRICAL EQUIPMENT

Ref. No.	Part No.	DESCRIPTION	QUANTITY

ELECTRICAL EQUIPMENT *continued*

46	14–0801	Nut	1
47	Reference only	H.T. lead	1
48	99-0590	Zener diode (49345)	1
49	D1000	Ignition lock C/W keys	1
50	99–0558	Ignition switch (31899)	1
51	99–1000	IGNITION SWITCH NUT (54130041)	1
52	D990	Rear stop switch (34815)	1
53	F9191	Bolt	2
54	F8979	Spring washer	2
55	E9122	Cable slip (stop switch)	1
56	D999	H.T. lead grommet	1

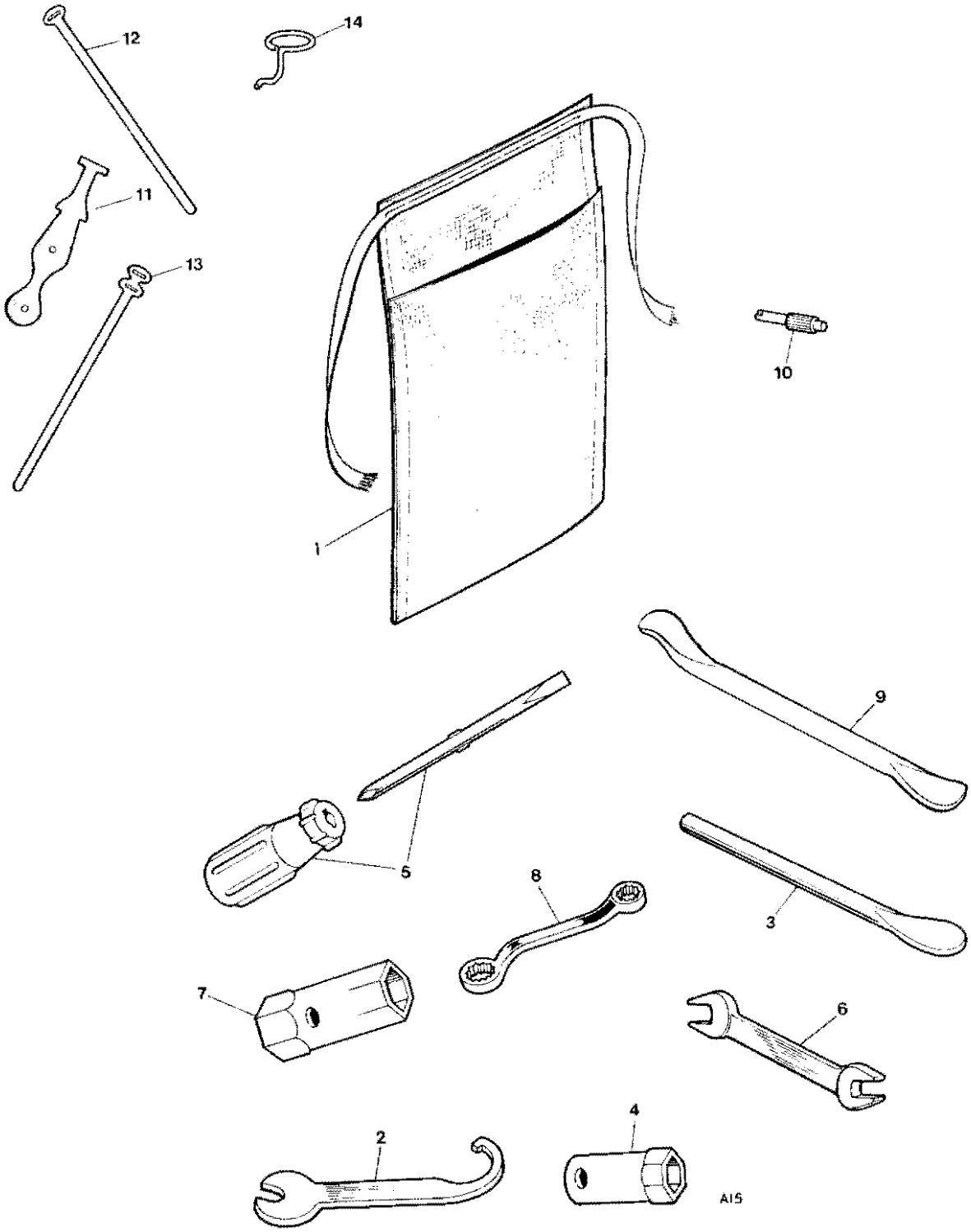

Fig. 17. TOOL KIT

Ref. No.	Part No.	DESCRIPTION	QUANTITY

TOOL KIT

	D2113	TOOLROLL COMPLETE WITH TOOLS	1
1	D291	Toolroll	1
2	D968	Suspension unit spanner	1
3	D801	Combined tyre lever and tommy bar	1
4	D87	Plug spanner	1
5	D767	Screwdriver set	1
6	D2084	Spanner	1
7	D971	Box spanner	1
8	D972	Ring spanner	1
9	NA14A	Tyre lever	1
10	D974	Tyre valve key	1
11	D978	Cable clip—rubber	5
12	XA69	Cable clip	3
13	D1029	Cable clip	5
14	H2654	Cable clip—wire	1

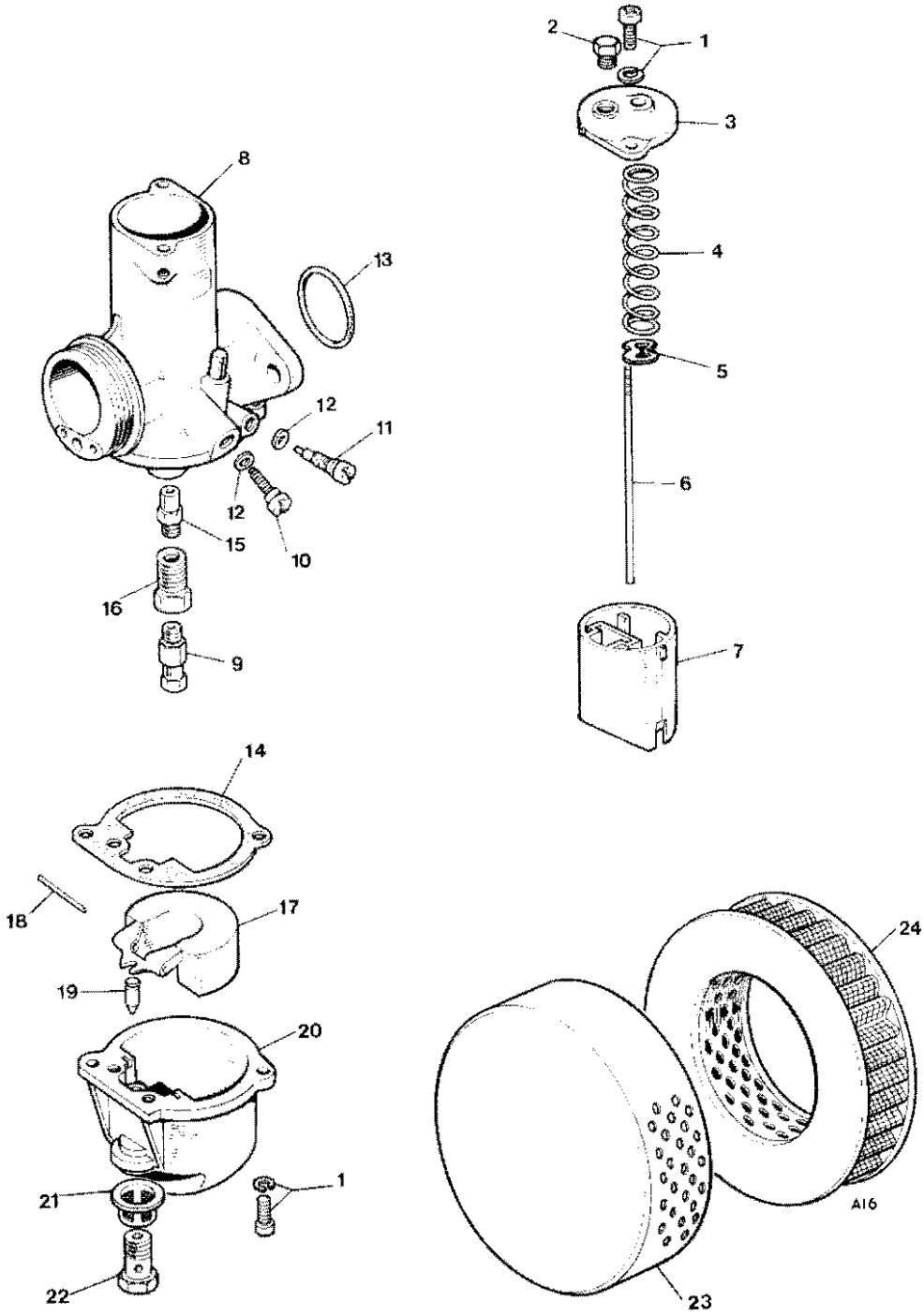

Fig. 18. CARBURETOR

Ref. No.	Part No.	DESCRIPTION	QUANTITY

CARBURETOR

	D2022	CARBURETOR COMPLETE (R928/4)	1
1	~~99-0521~~ D2032	Screw and washer (622/086)	4
2	99-0221	Plug screw (41137A)	1
3	99-0531	Top cap (928/097)	1
4	99-0507	Throttle spring (622/061)	1
5	99-0510	Circlip (622/067)	1
6	99-0529	Needle (928/063)	1
7	99-0527	Throttle valve (3) (928/060)	1
8	Reference only	Body	1
9	99-0444	Main jet (160 c.c.) (376/100)	1
10	99-0516	Throttle stop screw (622/077)	1
11	99-0515	Pilot air screw (622/076)	1
12	99-0520	"O" ring (622/082)	2
13	99-0522	"O" ring (622/101)	1
14	99-0514	Gasket (622/073)	1
15	99-0518	Needle jet (622/079)	1
16	99-0519	Jet holder (622/080)	1
17	99-0512	Float (622/069)	1
18	99-0513	Float spindle (622/071)	1
19	99-0511	Float needle (622/068)	1
20	99-0506	Float chamber (622/050)	1
21	99-0438	Filter (376/093)	1
22	99-0517	Banjo bolt (622/078)	1
23	D1053	AIR CLEANER COMPLETE	1
24	F9194	Air cleaner element	1

TRIUMPH

UK AND GENERAL EXPORT SUPPLEMENT TO

REPLACEMENT PARTS CATALOGUE

TROPHY 250

1970 MODEL

TRIUMPH ENGINEERING CO. LTD., MERIDEN WORKS

ALLESLEY · COVENTRY · ENGLAND

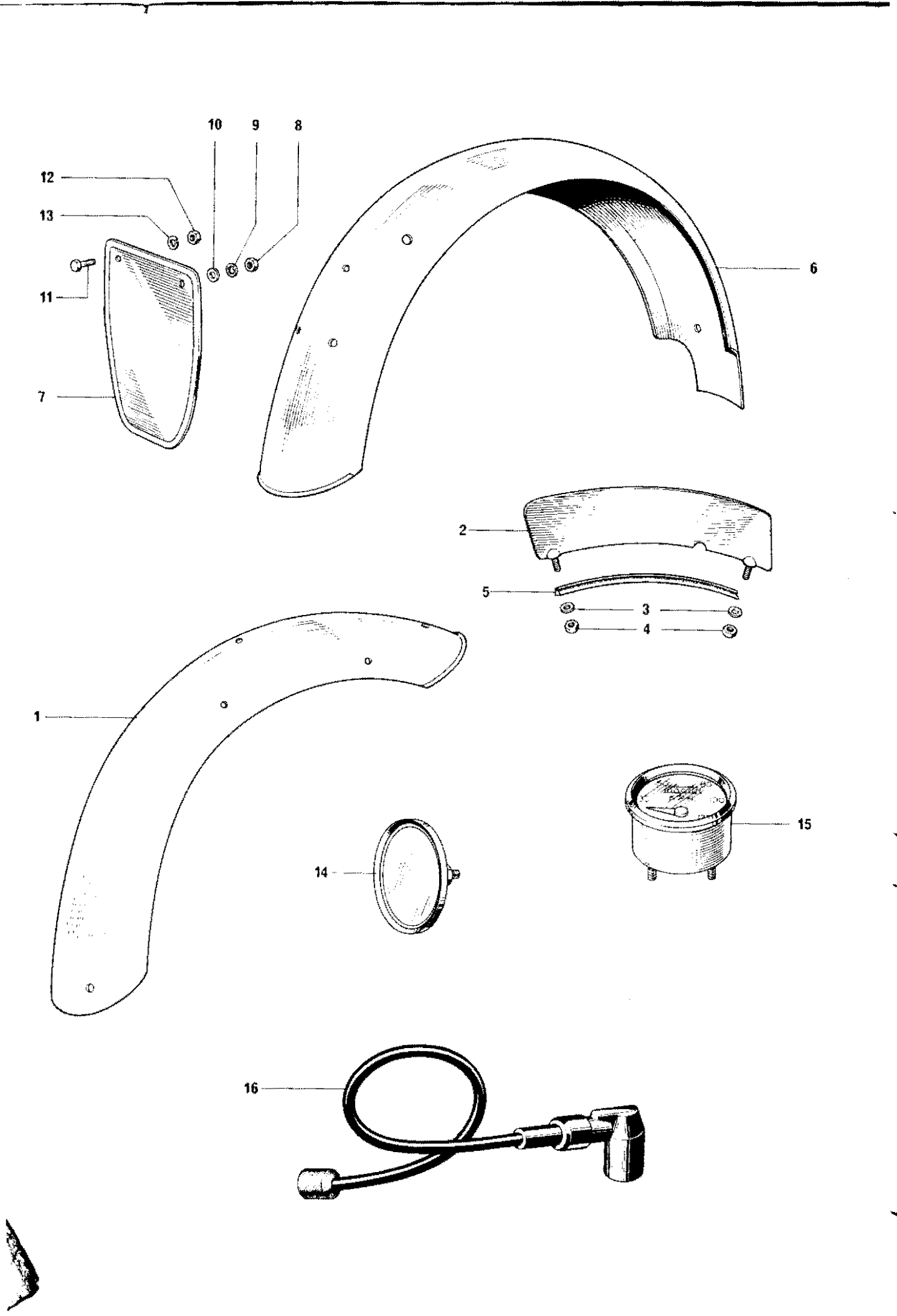
10
9
8
12
13
11
7
6
2
5
3
4
1
15
14
16

This supplement should be read in conjunction with the 1970 TROPHY 250 Replacement Parts Catalogue.

Ref. No.	*Part No.*	*DESCRIPTION*	*QUANTITY*
1	H3872	Front mudguard	1
2	H3873	Front number plate	1
3	F9020	Spring washer	1
4	F879	Nut	1
5	F10287	Number plate beading	1
6	F11425	Rear mudguard	1
7	F11526	Rear number plate	1
8	S5102	Nut	1
9	F9041	Shakeproof washer (bottom)	1
10	S602	Plain washer (bottom)	1
11	14-0604	Bolt washer (top)	2
12	14-0301	Nut washer (top)	2
13	F9020	Spring washer (top)	2
14	D1057	Licence holder	1
15	D1055	K.P.H. speedometer head	1
16	D2247	Resistive H.T. lead	1