1964

TRIUMPH

REPLACEMENT PARTS

CATALOGUE No. 2

UNIT CONSTRUCTION 650 c.c. TWINS

6T THUNDERBIRD

TR6 TROPHY

T120 BONNEVILLE 120

From engine No. DU 5825

TRIUMPH ENGINEERING COMPANY LIMITED
MERIDEN WORKS · ALLESLEY · COVENTRY · ENGLAND
TELEPHONE MERIDEN 331 TELEGRAMS "TRUSTY COVENTRY"

REF. 873/64

TRIUMPH WIPAC CHAMPION Matchless BSA NGK SPARK PLUGS ARIEL

Classic BIKE SHOP

01527 454158
sales@classicbikeshop.co.uk
www.classicbikeshop.co.uk

Classic Motorcycle Parts for BSA, Triumph, Norton, AMC, Matchless and More.

Spares include Exhausts, Silencers, British and Custom Seats, Brake and Wheel Components, Lucas Equipment, Cafe Racer Parts, Engine and Frame Parts and thousands more items.

Classic Bike Shop Ltd is a long established business with its roots dating back to the 1950's. Based in Redditch Worcestershire. We provide an online mail order service supplying classic motorcycle parts directly to customers both locally and worldwide. We have an extensive range of classic bike parts and spares for Triumph, BSA, Norton, AMC, Matchless models and other vintage bikes. We also have a section on the website for cafe racers, bobbers and custom bikes if you are looking for something a little different to get that unique look.

PayPal MasterCard Maestro VISA VISA Electron

CHAMPION Matchless BSA NGK SPARK PLUGS ARIEL SURFLEX PER FRENI PER FRIZIONI HEPOLITE

PARTS INQUIRY FORM

If we do not have the parts you are looking for on our website please
Email your inquiry form to sales@classicbikeshop.co.uk
(Please note we will try our very best to get back to you as soon as we can, but some inquiries may take longer then others.)

Customer Information
Name:
Phone Number:
Email:

Part Number	Description	Qty

ILLUSTRATION INDEX

Fig. No.	*Description*	*Page No.*
1	CRANKSHAFT AND CONNECTING RODS	12
2	CRANKCASE	14
3	OIL PUMP AND RELEASE VALVE AND MANIFOLD	16
4	CYLINDER BLOCK AND HEAD, 6T AND TR6	18
5	CYLINDER BLOCK AND HEAD, T120	20
6	TIMING COVER, CONTACT BREAKER AND COILS	22
7	GEARBOX INNER COVER AND SELECTORS	24
8	GEARBOX SHAFTS AND GEARS	26
9	GEARBOX OUTER COVER	28
10	CLUTCH	30
11	CHAINCASE AND CHAINS	32
12	FRAME	34
13	SWINGING FORK AND SUSPENSION UNITS	36
14	ENGINE UNIT FITTINGS AND FOOTRESTS	38
15	EXHAUST PIPES AND SILENCERS	40
16	TELESCOPIC FRONT FORKS, 6T	42
17	NACELLE HEADLAMP AND SWITCHES	44
18	TELESCOPIC FRONT FORK, TR6 AND T120	46
19	FRONT WHEEL	48
20	REAR WHEEL	50
21	QUICKLY DETACHABLE REAR WHEEL	52
22	PETROL TANKS	54
23	OIL TANK	56
24	BATTERY CARRIER AND AIR FILTER	58
25	PANELS AND TWINSEAT	60
26	MUDGUARDS	62
27	HANDLEBARS AND CONTROL LEVERS	64
28	CONTROL CABLES AND AMERICAN HANDLEBARS	66
29	TOOLKIT, FRAME LOCK, PILLION FOOTRESTS AND LICENCE HOLDER	68
30	AMAL CARBURETTER, 6T	70
31	AMAL CARBURETTER, TR6 AND T120	72
32	HEADLAMP, WIRING HARNESS, HORN AND RECTIFIER	74
33	SPEEDOMETER, TACHOMETER AND TAIL LAMP	76

INDEX

	Page
AIR FILTER	59
ALTERNATOR	13, 33
BATTERY CARRIER	59
CARBURETTER	71, 73
CARTON PACKS	9
CENTRE STAND	35
CHAINCASE	33
CHAINS	33
CLUTCH	31
COIL	23
CONTACT BREAKER	23
CONTROL CABLES	67
CONTROL LEVERS	65
CRANKCASE	15
CRANKSHAFT	13
CYLINDER HEAD	19, 21
ENGINE PLATES	39
EXHAUST PIPES	41
FOOTRESTS	39
FRONT FORKS	43, 47
FRONT WHEEL	49
GASKET SETS	10
GEARBOX	25, 27, 29
HANDLEBARS	65
HORN	45
MANIFOLD	17
MUDGUARDS	63
NACELLE	45
OIL PUMP	17
OIL TANK	57
PETROL TANK	55
PILLION FOOTRESTS	69
PISTONS	13
PROP STAND	35
Q.D. REAR WHEEL	53
REAR PANELS	61
REAR WHEEL	51
RECTIFIER	75
SILENCERS	41
SPARK PLUGS	23
SPEEDOMETER	77
STEERING RACES	35
SUSPENSION UNITS	37
SWITCHES	37, 45, 75
TIMING GEARS	13
TOOLKIT	69
TWINSEAT	61
VALVES	19, 21
WIRING HARNESS	45, 75
ZENER DIODE	45

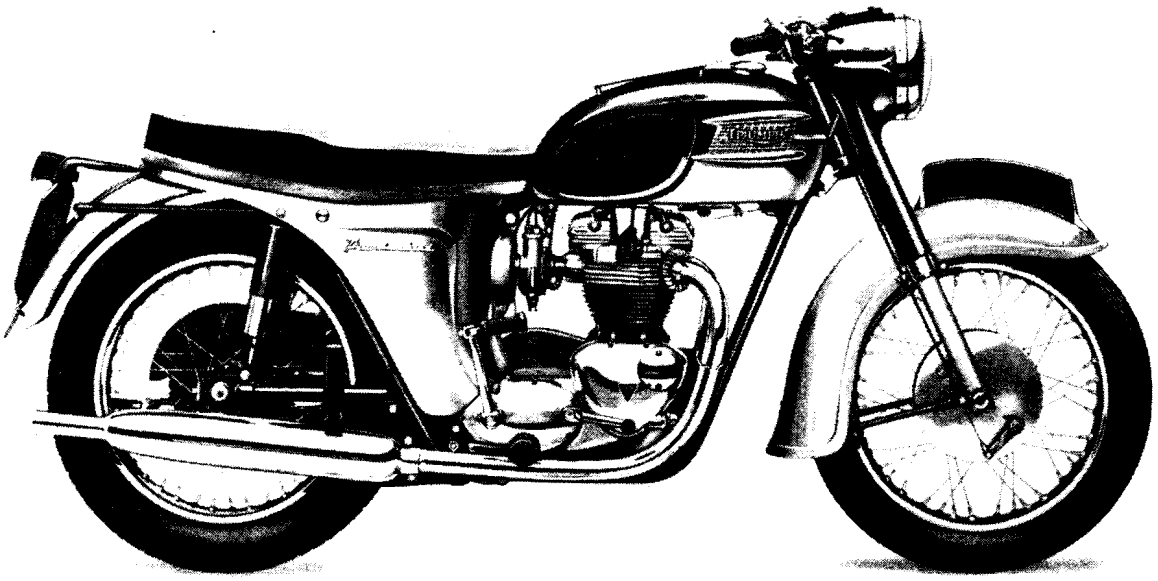

THUNDERBIRD (6T) TECHNICAL DATA

Bore and stroke			71 × 82 mm. 2·79 × 3·23 ins.
Capacity			649 c.c. (40 cu. ins.)
Compression ratio			7·5 : 1
Sparking plugs			Champion N4
Carburetter			Amal Monobloc 376
	Main jet		230
	Needle jet		·106
	Needle		Type C
	Throttle valve		376/4
	Pilot jet		25
Gearbox sprocket	Solo		20 teeth
	Sidecar		18 teeth
Chains	Front		$\frac{3}{8}$″ Duplex × 84 links
	Rear	Solo	$\frac{5}{8}$″ × $\frac{3}{8}$″ × 103 links
		Sidecar	$\frac{5}{8}$″ × $\frac{3}{8}$″ × 102 links
Capacities	Fuel Tank		4 galls. (18 litres)
	Oil Tank		5 pints (2·8 litres)
	Gearbox		$\frac{7}{8}$ pint (500 c.c.)
	Primary Chaincase		$\frac{5}{8}$ pint (350 c.c.)
	Front Forks (each leg)		$\frac{1}{3}$ pint (190 c.c.)
Brakes	Front, diameter		8″ (20·32 cms.)
	Rear, diameter		7″ (17·78 cms.)
Tyre size	Front		3·25 × 18
	Rear		3·50 × 18

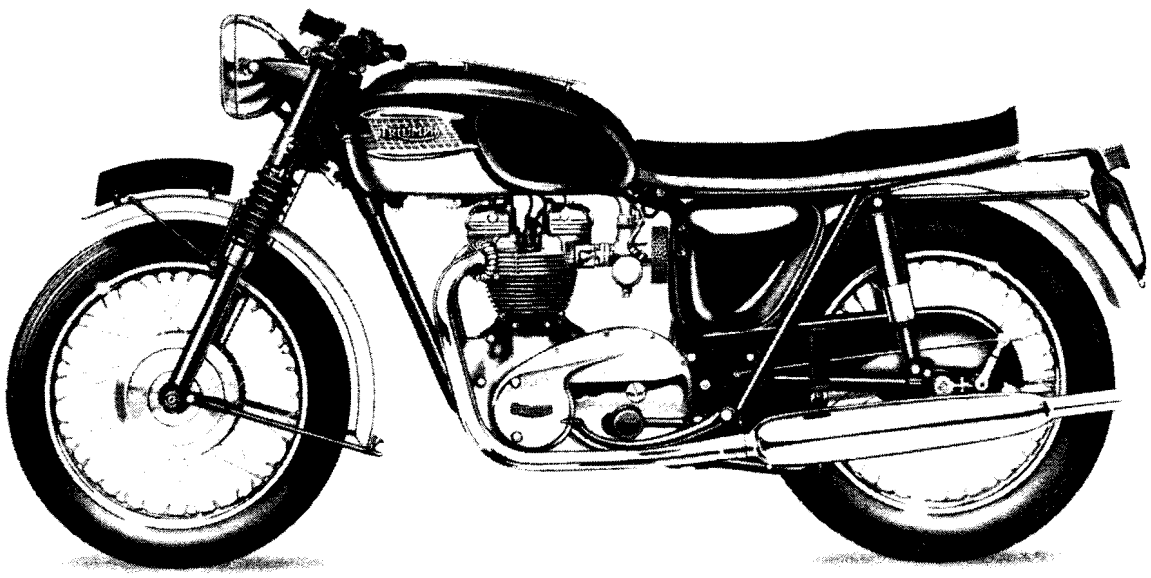

TROPHY (TR6) TECHNICAL DATA

Bore and stroke			71 × 82 mm. 2·79 × 3·23 ins.
Capacity			649 c.c. (40 cu. ins.)
Compression ratio			8·5 : 1
Sparking plugs			Champion N4
Carburetter			Amal Monobloc 389
	Main jet		310
	Needle jet		·106
	Needle		Type D
	Throttle valve		389/3½
	Pilot jet		25
Gearbox sprocket		Solo	19 teeth
		Sidecar	17 teeth
Chains	Front		⅜″ Duplex × 84 links
	Rear	Solo	⅝″ × ⅜″ × 103 links
		Sidecar	⅝″ × ⅜″ × 102 links
Capacities	Fuel Tank		4 galls. (18 litres)
	Oil Tank		5 pints (2·8 litres)
	Gearbox		⅞ pint (500 c.c.)
	Primary Chaincase		⅝ pint (350 c.c.)
	Front Forks (each leg)		⅓ pint (190 c.c.)
Brakes	Front, diameter		8 in. (20·32 cm.)
	Rear, diameter		7 in. (17·78 cm.)
Tyre size	Front		3·25 × 19
	Rear		4·00 × 18

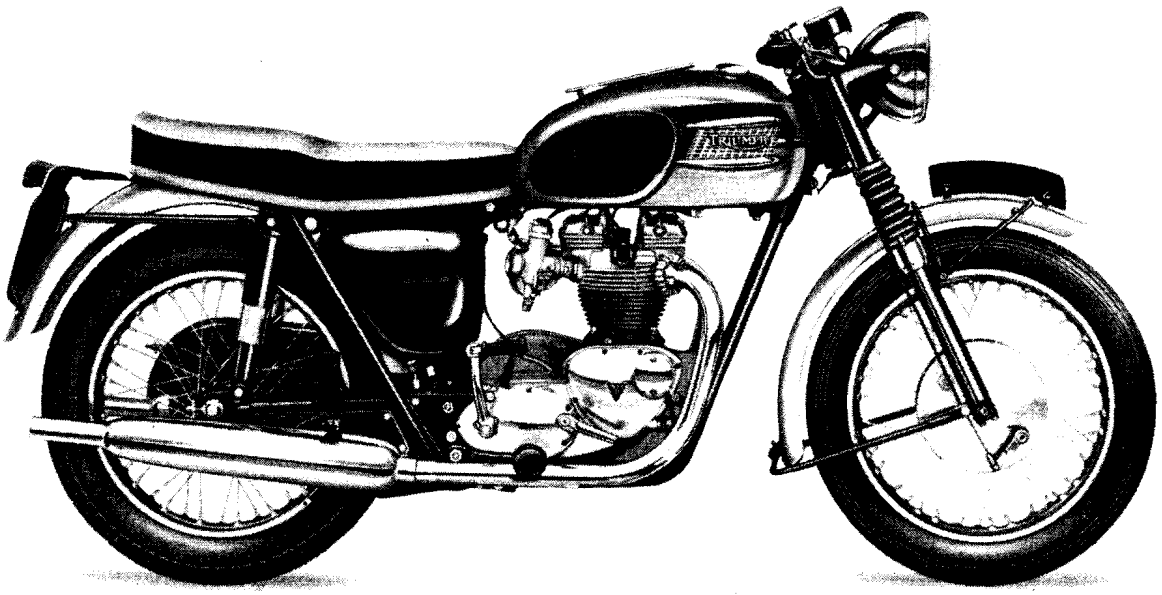

BONNEVILLE 120 (T120) TECHNICAL DATA

Bore and stroke			71 × 82 mm. 2·79 × 3·23 ins.
Capacity			649 c.c. (40 cu. ins.)
Compression ratio			8·5 : 1
Sparking plugs			Champion N4
Carburetters			2 Amal Monobloc 389
	Main jet		260
	Needle jet		·106
	Needle		Type D
	Throttle valve		389/3
	Pilot jet		25
Gearbox sprocket		Solo	19 teeth
		Sidecar	17 teeth
Chains	Front		$\frac{3}{8}$″ Duplex × 84 links
	Rear	Solo	$\frac{5}{8}$″ × $\frac{3}{8}$″ × 103 links
		Sidecar	$\frac{5}{8}$″ × $\frac{3}{8}$″ × 102 links
Capacities	Fuel Tank		4 galls. (18 litres)
	Oil Tank		5 pints (2·8 litres)
	Gearbox		$\frac{7}{8}$ pint (500 c.c.)
	Primary Chaincase		$\frac{5}{8}$ pint (350 c.c.)
	Front Forks (each leg)		$\frac{1}{3}$ pint (190 c.c.)
Brakes	Front, diameter		8 in. (20·32 cm.)
	Rear, diameter		7 in. (17·78 cm.)
Tyre size	Front		3·25 × 18
	Rear		3·50 × 18

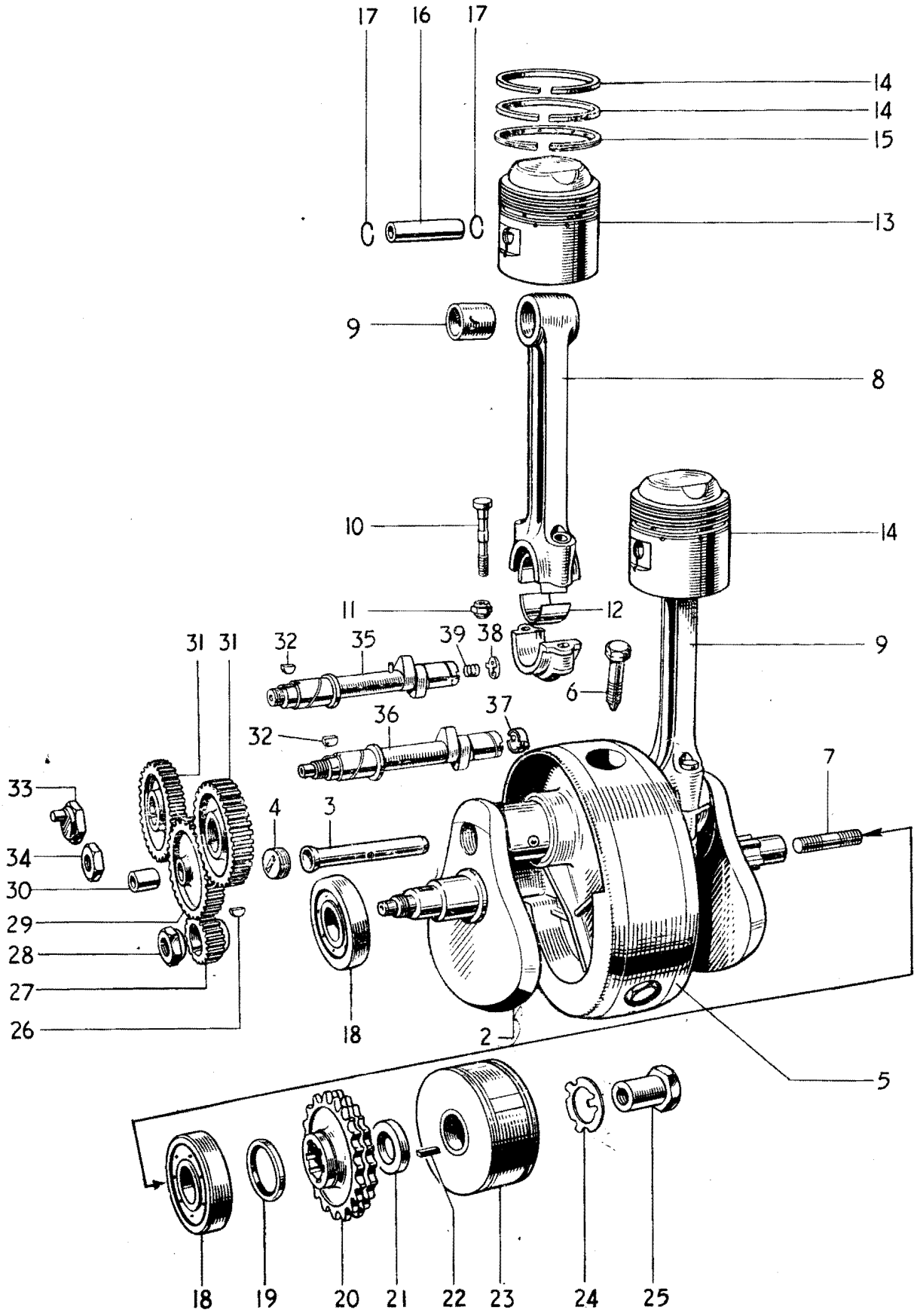

Fig. 1. CRANKSHAFT AND CONNECTING RODS

CRANKSHAFT AND CONNECTING RODS

Ref. No.	Part No.	DESCRIPTION	QUANTITY 6T	TR6	T120
1	E4642	CRANKSHAFT AND FLYWHEEL ASSEMBLY	1	1	1
2	E4643	CRANKSHAFT C/W. OIL TUBE	1	1	1
3	E3903	Oil tube	1	1	1
4	E3905	Screwed plug	1	1	1
5	E4479	Flywheel	1	1	1
6	*E3907	Flywheel bolt	3	3	3
7	E3114	Crankshaft stud ($1\frac{3}{16}$" O.A.)	1	1	1
8	E3606	CONNECTING ROD	2	–	–
8	E3606T	CONNECTING ROD	–	2	2
9	E1341	Small end bush	2	2	2
10	E2490A	Connecting rod bolt	4	4	4
11	E2922	Self locking nut	4	4	4
12	E3586	Big end bearing	4	4	4
13	CP199	PISTON COMPLETE 7·5:1 C.R.	2	–	–
13	CP200	PISTON COMPLETE 8·5:1 C.R.	–	2	2
14	E3049	Taper compression ring	4	4	4
15	E2898	Oil control ring	2	2	2
16	WE203E	Gudgeon pin	2	2	2
17	WE479	Circlip	4	4	4
18	E1591	Main bearing	2	2	2
19	E3876	Oil seal	1	1	1
20	E5446	Engine sprocket, 29 teeth Duplex	1	1	1
21	E4573	Distance piece	1	1	1
22	E3974	Rotor key	1	1	1
23	54213901	Rotor, type RM19	1	1	1
24	E3975	Tab washer	1	1	1
25	E3977	Nut	1	1	1
26	E1580	Key	1	1	1
27	E5447	Timing pinion	1	1	1
28	E4565	Nut	1	1	1
29	E4566	INTERMEDIATE WHEEL	1	1	1
30	E400	Intermediate wheel bush	1	1	1
31	E4562	Camshaft wheel	2	2	2
32	E1558	Camshaft key	2	2	2
33	E1463	Inlet camshaft nut	1	1	1
34	E4563	Exhaust camshaft nut	1	1	1
35	E4818	Inlet camshaft	1	–	–
35	E4819	Inlet camshaft	–	1	1
36	E4848	Exhaust camshaft	1	–	–
36	E4855	EXHAUST CAMSHAFT	–	1	1
37	E4700	Tachometer drive thimble	–	1	1
38	E5316	Rotary breather valve	1	1	1
39	E2256	Breather valve spring	1	1	1

* Use D524 Loctite Sealant

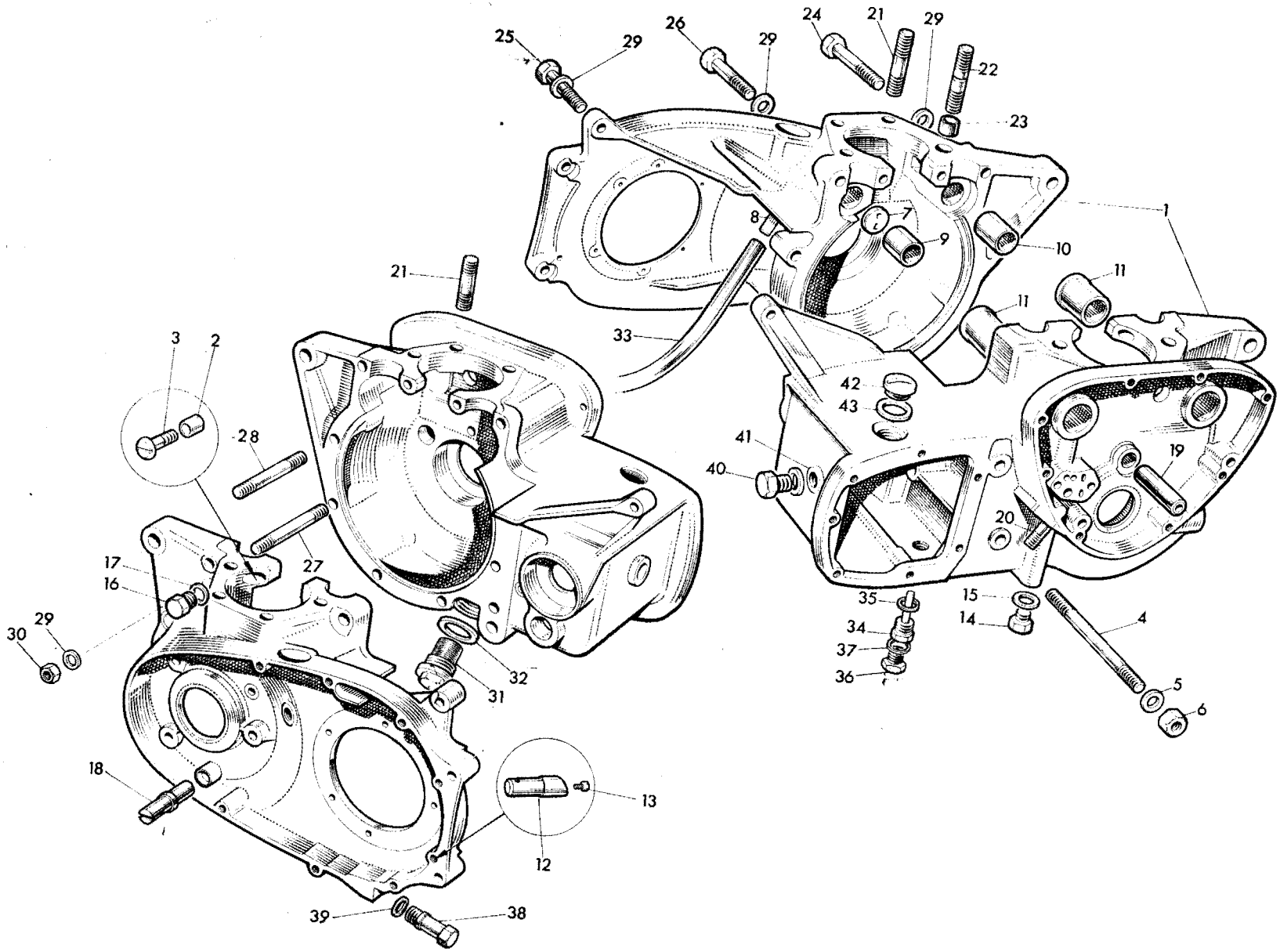

Fig. 2. CRANKCASE

CRANKCASE

Ref. No.	Part No.	DESCRIPTION	6T	TR6	T120
1	E4533/4	CRANKCASE	1	1	1
2	E3716	Hollow Dowel	1	1	1
3	E5232	Screw ($\frac{21}{32}$ in. U.H.)	2	2	2
4	E4542	Stud ($4\frac{1}{2}$ in. O.A.)	2	2	2
5	S25–2	Plain washer	2	2	2
6	P0172A	Nut	2	2	2
7	GS87	Breather disc	1	1	1
8	E2724	Breather pipe	1	1	1
9	E2260	Inlet camshaft bush	1	1	1
10	E1516	Exhaust camshaft bush	1	1	1
11	E1479	Camshaft bush	2	2	2
12	E4744	Chain oiler tube	1	1	1
13	E3885	Chain oiler jet	1	1	1
13	H689	Blanking screw	A	A	A
14	E4539	Oilway plug	1	1	1
15	GS439	Fibre washer	1	1	1
16	E4706	Tachometer drive plug	1	1	1
17	T1257	Fibre washer	1	1	1
18	E4147	Chain tensioner abutment	1	1	1
19	E375	Intermediate wheel spindle	1	1	1
20	E3717	Oil pipe stud ($1\frac{1}{2}$ in. O.A.)	1	1	1
21	E672	Cylinder stud ($1\frac{5}{8}$ in. O.A.)	6	6	6
22	E3523	Cylinder stud ($1\frac{5}{8}$ in. O.A.)	2	2	2
23	E1534A	Hollow dowel	2	2	2
24	E4541	Bolt ($2\frac{1}{2}$ in. U.H.)	1	1	1
25	E4540	Bolt ($1\frac{3}{4}$ in. U.H.)	1	1	1
26	E4098	Bolt ($1\frac{7}{8}$ in. U.H.)	1	1	1
27	E4856	Stud ($5\frac{1}{16}$ in. O.A.)	1	1	1
28	E2888	Stud ($3\frac{7}{8}$ in. O.A.)	3	3	3
29	S25–3	Plain washer	11	11	11
30	S1–51	Nut	8	8	8
31	E5312	Crankcase filter...	1	1	1
32	E5315	Copper washer	1	1	1
33	E5375	Breather extension pipe	1	1	1
34	T1112	Drain plug (with level tube)	1	1	1
35	T1257	Fibre washer	1	1	1
36	T361	Level plug	1	1	1
37	WE170	Fibre washer	1	1	1
38	E4922 70-6347	Drain and adjuster plug	1	1	1
39	T1738	Fibre washer	1	1	1
40	E4579	Blanking plug	1	1	1
41	T1921	Fibre washer	1	1	1
42	E732	Filler plug	2	2	2
43	NE507	Fibre washer	2	2	2

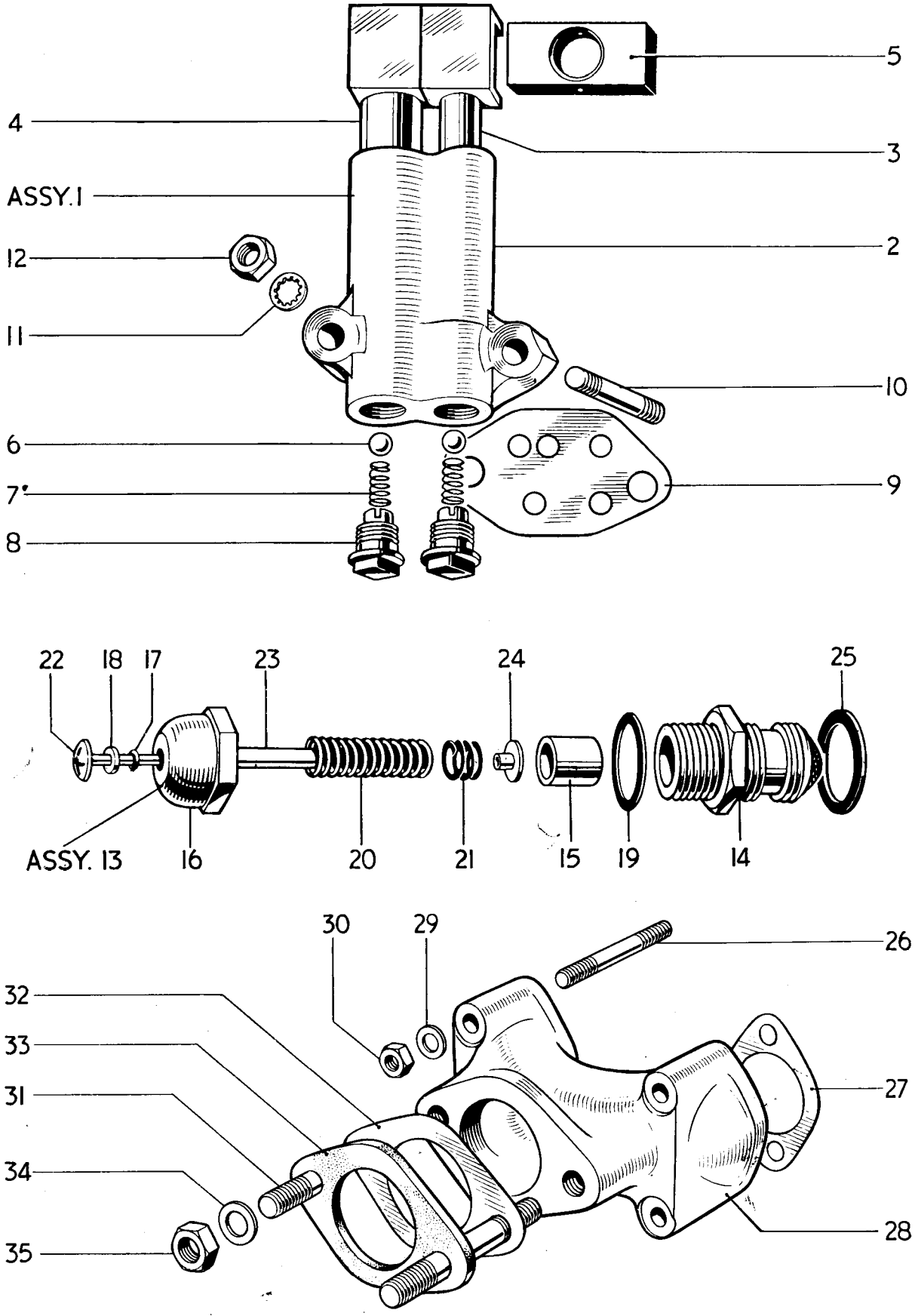

Fig. 3. OIL PUMP AND RELEASE VALVE AND MANIFOLD

Ref. No.	Part No.	DESCRIPTION	QUANTITY		
		OIL PUMP AND RELEASE VALVE AND MANIFOLD	6T	TR6	T120
1	E3878	OIL PUMP	1	1	1
2	E3731	Pump body...	1	1	1
3	GS153	Feed plunger	1	1	1
4	E1476	Scavenge plunger	1	1	1
5	E495	Drive block	1	1	1
6	S70–7	Valve ball	2	2	2
7	E403	Valve spring	2	2	2
8	E2360	Screwed plug	2	2	2
9	E3730	Joint washer	1	1	1
10	E3718	Oil pump stud ($1\frac{5}{16}$ in. U.H.)	2	2	2
11	E3887	Serrated washer	2	2	2
12	E3732	Nut	2	2	2
13	E4191	OIL RELEASE VALVE AND INDICATOR	1	1	1
14	E2794	Valve body	1	1	1
15	GS251	Piston	1	1	1
16	E4192	Cap	1	1	1
17	E4193	Sealing ring	1	1	1
18	E4194	Cup	1	1	1
19	GS254	Fibre washer	1	1	1
20	E2788	Main spring	1	1	1
21	E2789	Auxiliary spring	1	1	1
22	E2791	Button and shaft	1	1	1
23	E2793	Sealing rubber	1	1	1
24	E2792	Shaft nut	1	1	1
25	E1670	Fibre washer	1	1	1
26	E2973	Stud ($1\frac{15}{16}$ in. O.A.)	4	4	–
27	E3334	Joint washer	2	2	–
28	E3304	Inlet manifold	1	1	–
29	S25–13	Plain washer	4	4	–
30	W103	Nut	4	4	–
31	E2962	Stud ($1\frac{7}{32}$ in. O.A.)	2	2	–
32	NA43A	Joint washer	1	1	–
33	E2968	Insulating block	1	1	–
34	S25–3	Plain washer	2	2	–
35	S1–51	Nut	2	2	–

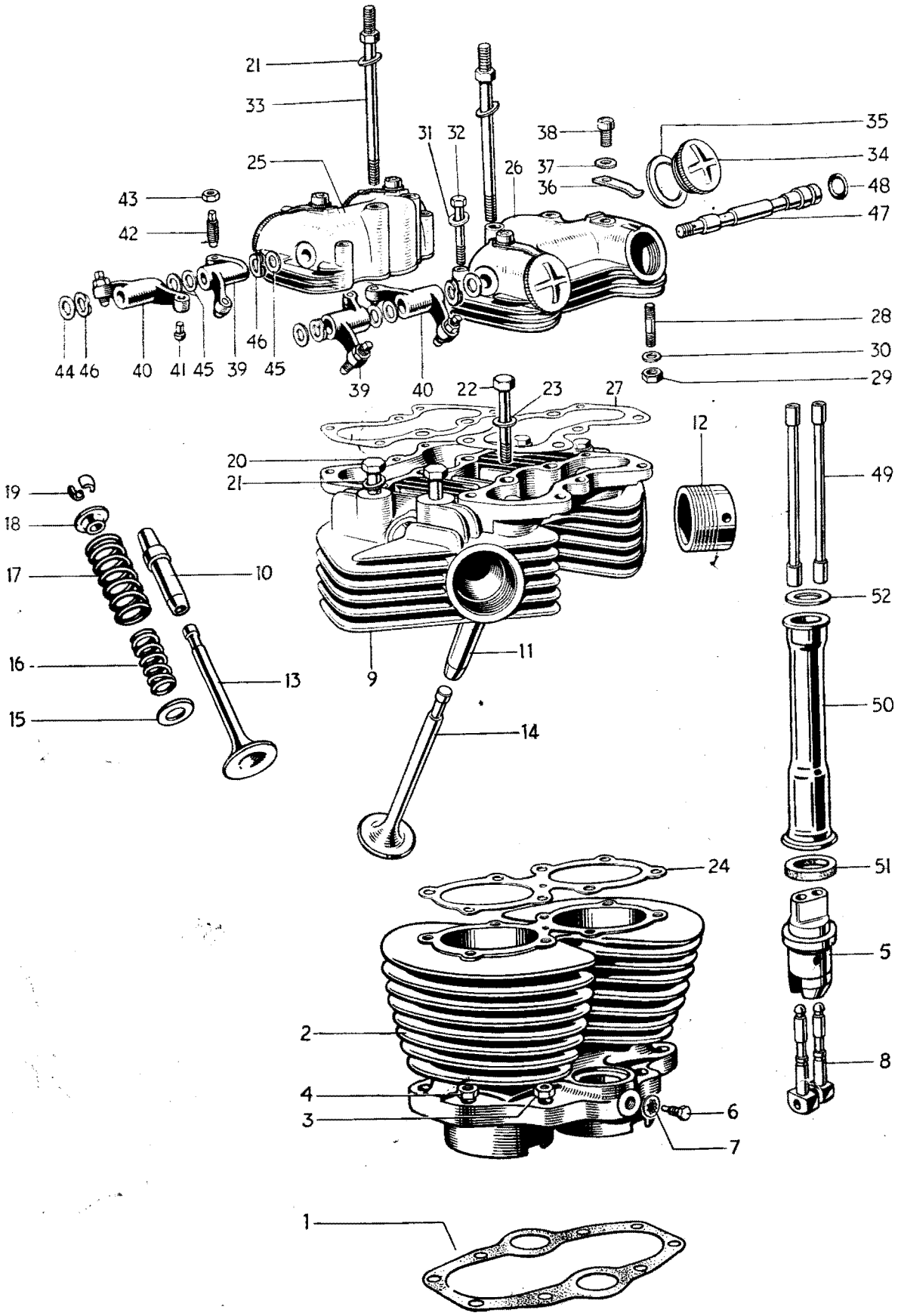

Fig. 4. CYLINDER BLOCK AND HEAD, 6T AND TR6

Ref. No.	Part No.	DESCRIPTION	QUANTITY	
		CYLINDER BLOCK AND HEAD, 6T AND TR6	6T	TR6
1	E2894	Cylinder base washer	1	1
2	E4546	Cylinder block	1	1
3	W76	Inner cylinder base nut	4	4
4	P0172A	Outer cylinder base nut	4	4
5	E1477	Tappet guide block	2	2
6	H200	Tappet block screw	2	2
7	E1612	Serrated washer	2	2
8	E3059	Tappet	4	4
9	E4552	CYLINDER HEAD c/w GUIDES	1	1
10	E2899	Inlet valve guide	2	2
11	E2900	Exhaust valve guide	2	2
12	E3583	Exhaust pipe adaptor	2	2
13	E3310	Inlet valve	2	2
14	E3927	Exhaust valve	2	2
15	E5008	Bottom cup	4	–
15	E1544	Bottom cup	–	4
16	E4221	Inner valve spring (red spot)	4	–
17	E4222	Outer valve spring (red spot)	4	–
16	E3001	Inner valve spring (white spot)	–	4
17	E3002	Outer valve spring (white spot)	–	4
18	E1543	Top collar	4	4
19	WE259A	Split cotter	8	8
20	E327	Cylinder head bolt ($3\frac{3}{8}$ in. U.H.)	4	4
21	F2184	Plain washer	8	8
22	E4771	Bolt (3 in. U.H.)	1	1
23	S25–3	Plain washer	1	1
24	E4547	Cylinder head gasket	1	1
25	E4550	Inlet rocker box	1	1
26	E4551	Exhaust rocker box	1	1
27	E4549	Joint washer	2	2
28	E2980	Rocker box stud ($1\frac{5}{16}$ in. O.A.)	6	6
29	F879	Rocker box nut	6	6
30	E3302	Plain washer	6	6
31	E2982	Rocker box bolt ($2\frac{5}{32}$ in. U.H.)	4	4
32	S25–13	Plain washer	4	4
33	E1596	Cylinder head bolt (for torque stay)	4	4
34	E4610	Inspection cap	4	4
35	E3751	Joint washer	4	4
36	E4609	Locking spring	4	4
37	WE170	Fibre washer	4	4
38	T1553	Screw ($\frac{3}{8}$ in. U.H.)	4	4
39	E1457	ROCKER (right exhaust, left inlet)	2	2
40	E1458	ROCKER (left exhaust, right inlet)	2	2
41	E1483	Rocker ball pin	4	4
42	E1513	Rocker adjusting pin	4	4
43	E470	Adjuster lock nut	4	4
44	E1330	Thrust washer, $\frac{3}{8}$ in.	2	2
45	E1575	Thrust washer, $\frac{1}{2}$ in.	6	6
46	E1574	Spring washer	4	4
47	E1512	Rocker spindle	2	2
48	E3253	Sealing rubber	2	2
49	E2620	Push rod	4	4
50	— 70 — 3646	Cover tube	2	2
51	E1496	Bottom joint washer	2	2
52	E3547	Top joint washer	2	2

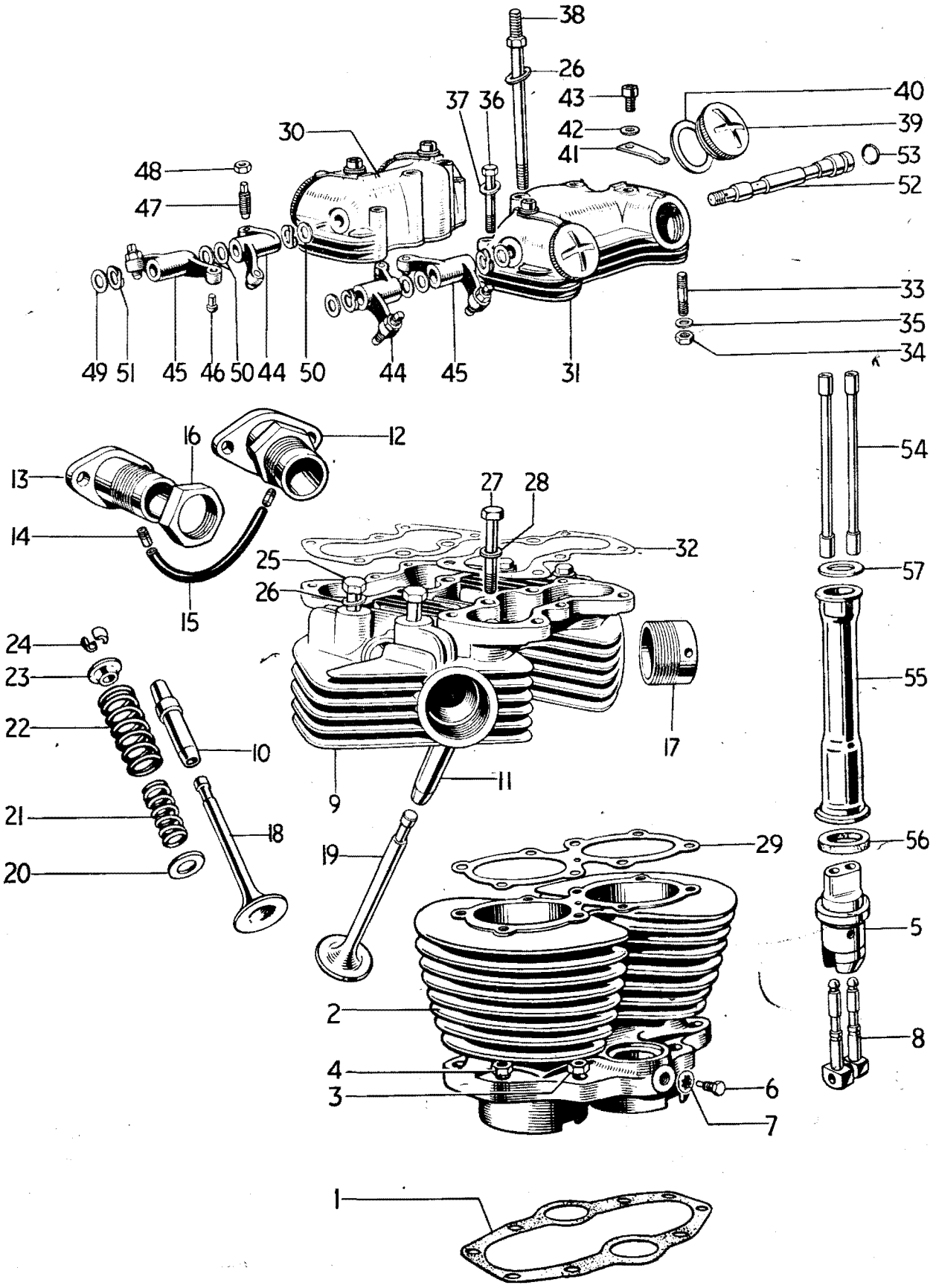

Fig. 5. CYLINDER BLOCK AND HEAD, T120

Ref. No.	Part No.	DESCRIPTION	QUANTITY
		CYLINDER BLOCK AND HEAD, T120	T120
1	E2894	Cylinder base washer	1
2	E4546	Cylinder block	1
3	W76	Inner cylinder base nut	4
4	P0172A	Outer cylinder base nut	4
5	E1477	Tappet guide block	2
6	H200	Tappet block screw	2
7	E1612	Serrated washer	2
8	E3059	Tappet	4
9	E5348	CYLINDER HEAD c/w GUIDES	1
10	E3827	Inlet valve guide	2
11	E3828	Exhaust valve guide	2
12	E5349	Carburetter adaptor, left	1
13	E5350	Carburetter adaptor, right	1
14	E4791	Connector	2
15	E4792	Balance pipe	1
16	E4608	Adaptor locking nut	2
17	E3583	Exhaust pipe adaptor	2
18	E4603	Inlet valve	2
19	E2904	Exhaust valve	2
20	E1544	Bottom cup	4
21	E3001	Inner valve spring	4
22	E3002	Outer valve spring	4
23	E1543	Top collar	4
24	WE259A	Split cotter	8
25	E327	Cylinder head bolt (3⅜ in. U.H.)	4
26	F2184	Plain washer	8
27	E4771	Bolt (3 in. U.H.)	1
28	S25–3	Plain washer	1
29	E4547	Cylinder head gasket	1
30	E4550	Inlet rocker box	1
31	E4551	Exhaust rocker box	1
32	E4549	Joint washer	2
33	E2980	Rocker box stud (5/16 in. O.A.)	6
34	F879	Nut	6
35	E3302	Plain washer	6
36	E2982	Rocker box bolt (2 5/32 in. U.H.)	4
37	S25–13	Plain washer	4
38	E1596	Cylinder head bolt (for torque stay)	4
39	E4610	Inspection cap	4
40	E3751	Joint washer	4
41	E4609	Locking spring	4
42	WE170	Fibre washer	4
43	T1553	Screw (⅜ in. U.H.)	4
44	E1457	ROCKER (right exhaust, left inlet)	2
45	E1458	ROCKER (left exhaust, right inlet)	2
46	E1483	Rocker ball pin	4
47	E1513	Rocker adjusting pin	4
48	E470	Adjuster lock nut	4
49	E1330	Thrust washer, ⅜ in.	2
50	E1575	Thrust washer, ½ in.	6
51	E1574	Spring washer	4
52	E1512	Rocker spindle	2
53	E3253	Sealing rubber	2
54	E2620	Push rod	4
55	E3646	Cover tube	2
56	E1496	Bottom joint washer	2
57	E3547	Top joint washer	2

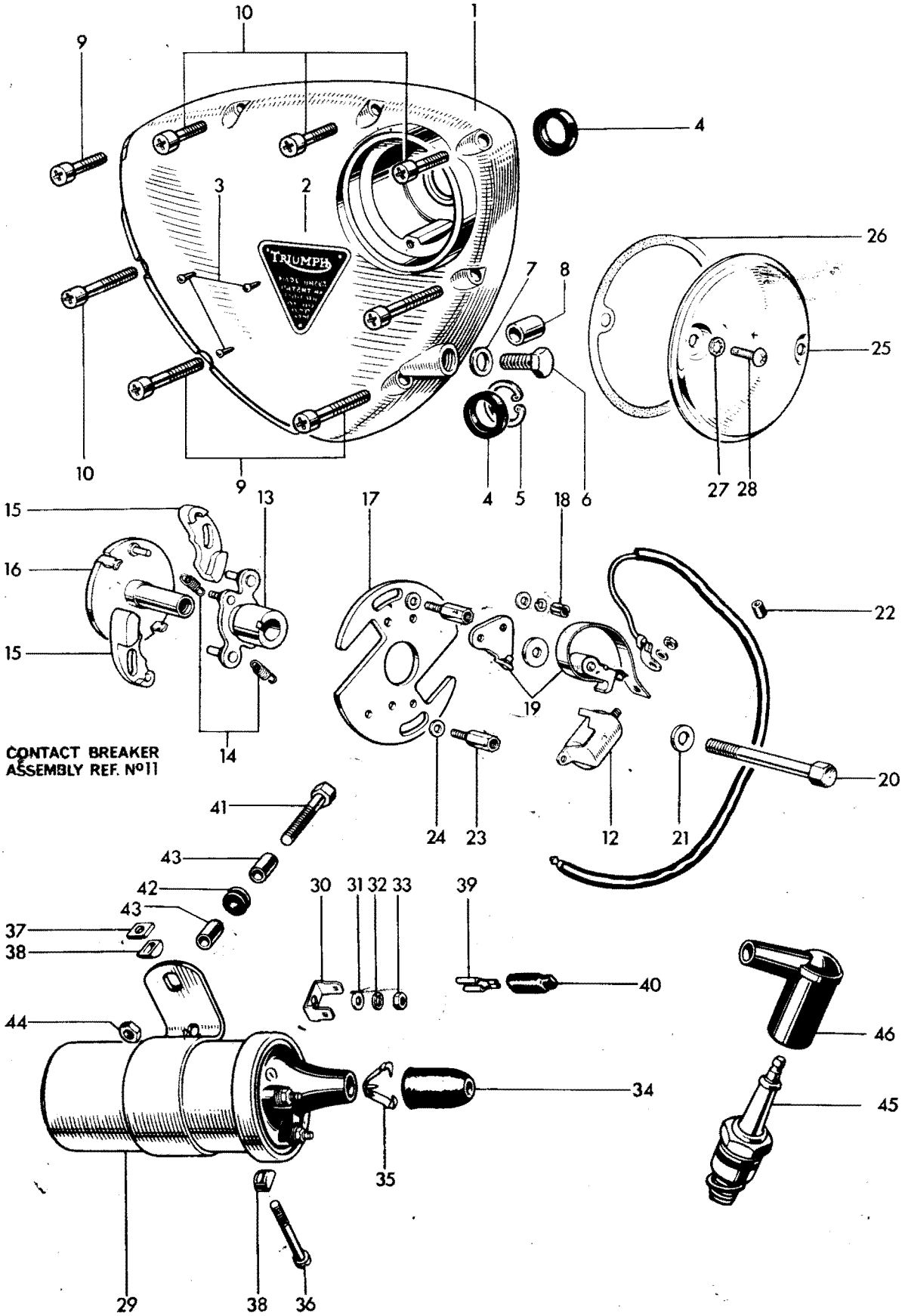

Fig. 6. TIMING COVER, CONTACT BREAKER AND COILS

Ref. No.	Part No.	DESCRIPTION	QUANTITY		

TIMING COVER, CONTACT BREAKER AND COILS

			6T	TR6	T120
1	E4567	Timing cover	1	1	1
2	E4016	Patent plate	1	1	1
3	D208–5	Hammer-drive screw	3	3	3
4	E4568	Oil seal	2	2	2
5	E4569	Circlip	1	1	1
6	E2615	Timing cover plug	1	1	1
7	E1335	Copper washer	1	1	1
8	T989	Hollow dowel	2	2	2
9	E3668	Screw (1 5/16 in. U.H.)	3	3	3
10	E3204	Screw (1 in. U.H.)	5	5	5
11	47605	CONTACT BREAKER, type 4CA	1	1	1
12	425377	Condenser	2	2	2
13	54441729	Cam	1	1	1
14	54415642	Spring set	1	1	1
15	[illegible]	425359 Weight	2	2	2
16	54415751	Sleeve and action plate	1	1	1
17	425370	Base plate	1	1	1
18	169194	Slotted nut	4	4	4
19	54415803	Contact set	2	2	2
20	E5451	Bolt (2 in. U.H.)	1	1	1
21	S25–43	Plain washer	1	1	1
22	E4707	Rubber grommet	1	1	1
23	E4747	Pillar bolt	2	2	2
24	E2351	Plain washer	2	2	2
25	E4571	Cover	1	1	1
26	E5049	Joint washer	1	1	1
27	GS299	Serrated washer	2	2	2
28	F4715	Screw (13/32 in. U.H.)	2	2	2
29	45110	IGNITION COIL, type MA12	2	–	–
29	45152	IGNITION COIL, type MA6	–	2	2
30	54190108	Lucar terminal	4	4	4
31	131023	Plain washer (E2351)	4	4	4
32	188330	Serrated washer (GS299)	4	4	4
33	166043	Nut (F3799)	4	4	4
34	421554	Rubber grommet	2	2	2
35	421863	Cable clip	2	2	2
36	100104	Screw	2	2	2
37	169160	Square nut	2	2	2
38	422369	"D" washer	4	4	4
39	54942078	Lucar connector	4	4	4
40	54190042	Insulating cover	4	4	4
41	F4744	Bolt (1 5/16 in. U.H.)	2	2	2
42	F5466	Rubber grommet	2	2	2
43	F4366	Distance piece	4	4	4
44	E3290	Self locking nut	2	2	2
45	—	Sparking plug (Champion N4)	2	2	2
46	D297	Plug cover and suppressor	2	2	2
46	D262	Plug cover	A	A	A

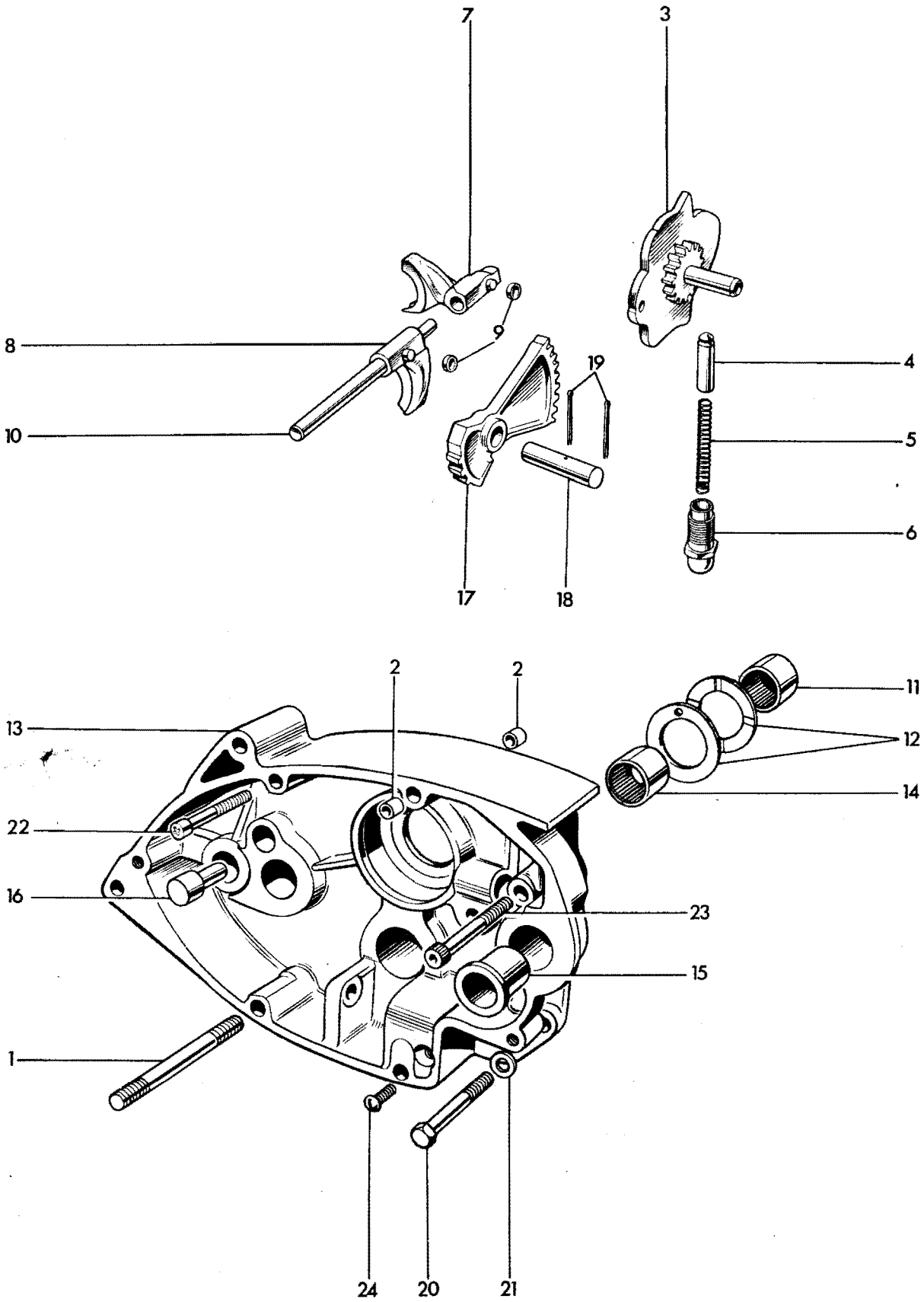

Fig. 7. GEARBOX INNER COVER AND SELECTORS

GEARBOX INNER COVER AND SELECTORS

Ref. No.		Part No.	DESCRIPTION	QUANTITY 6T	TR6	T120
1	—	E4535	Stud (3 in. O.A.)	2	2	2
2		T989	Hollow dowel	4	4	4
3		T500	Gear selector camplate	1	1	1
4		T44	Camplate index plunger	1	1	1
5	—	T373	Index plunger spring	1	1	1
6		T372	Index plunger holder	1	1	1
7		T260B	Mainshaft selector fork	1	1	1
8		T913	Layshaft selector fork	1	1	1
9	—	NT261 57-2596	Selector fork roller	2	2	2
10		T291	Selector fork rod	1	1	1
11		T1606	Layshaft bearing	1	1	1
12		T1607	Thrust washer	2	2	2
13		T1703	GEARBOX INNER COVER	1	1	1
14		T1614	Layshaft bearing	1	1	1
15		T412	Gearchange spindle bush	1	1	1
16		T45	Kickstarter stop	1	1	1
17		T397	Camplate operating quadrant	1	1	1
18		T1896	Quadrant spindle	1	1	1
19		$\frac{5}{64}$ in. x $1\frac{3}{8}$ in.	Split pin	2	2	2
20		T1778	Bolt ($1\frac{1}{8}$ in. U.H.)	1	1	1
21		E3446	Plain washer	1	1	1
22	—	E3204	Screw (1 in. U.H.)	1	1	1
23	—	T1779	Socket screw ($1\frac{3}{4}$ in. U.H.)	1	1	1
24		E3728	Countersunk screw ($\frac{15}{32}$ in. U.H.)	1	1	1

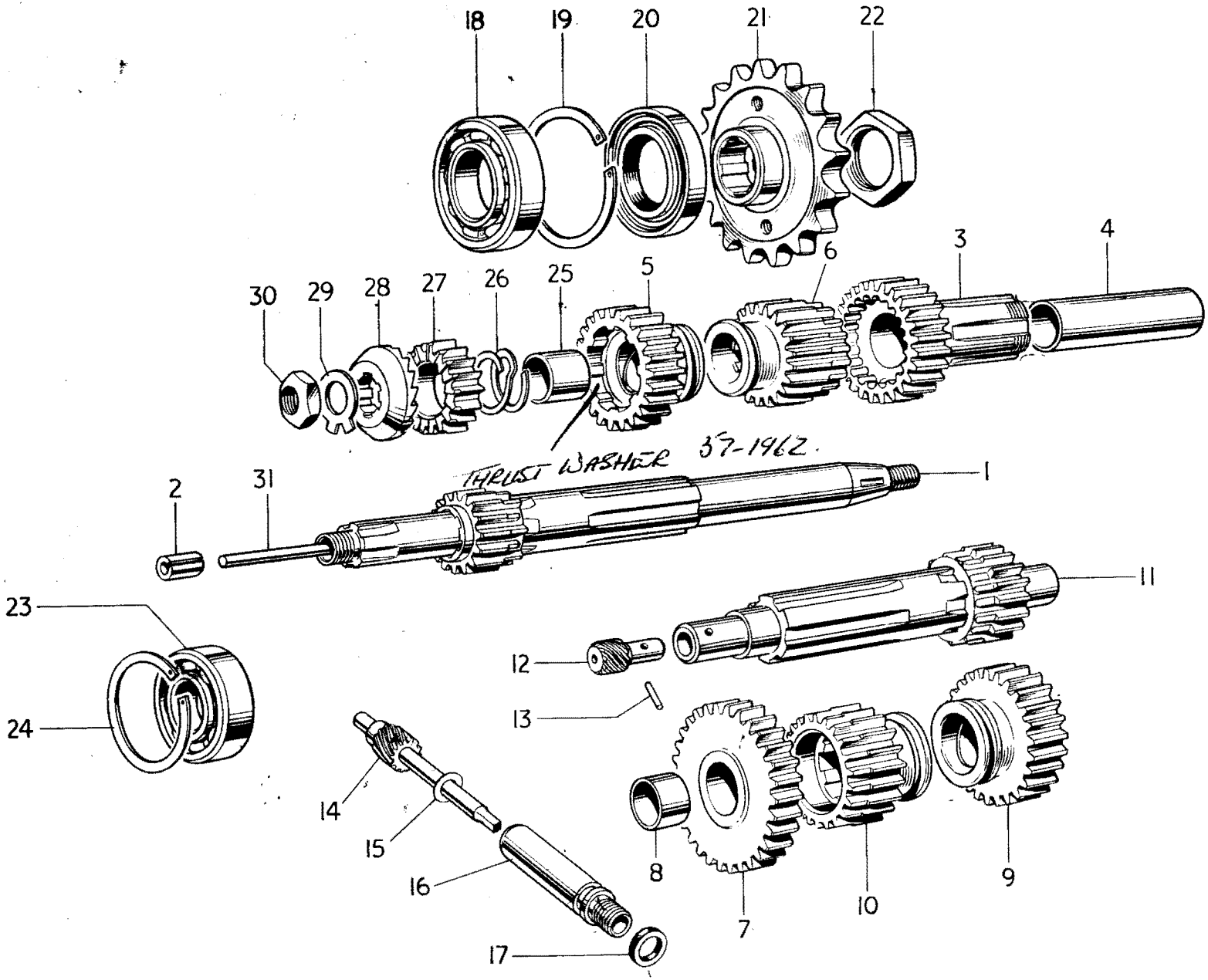

Fig. 8. GEARBOX SHAFTS AND GEARS

GEARBOX SHAFTS AND GEARS

Ref. No.	Part No.	DESCRIPTION	QUANTITY 6T	TR6	T120
1	T914	MAINSHAFT c/w LOW GEAR (16T)	1	1	1
2	PT108B	Clutch rod bush	1	1	1
3	T1914	MAINSHAFT HIGH GEAR (26T)	1	1	1
4	T1370	High gear bush	1	1	1
5	T917	Mainshaft third gear (24T)	1	1	1
6	T916	Mainshaft second gear (20T)	1	1	1
7	T926	LAYSHAFT LOW GEAR (30T)	1	1	1
8	T928	Low gear bush	1	1	1
9	T1065	Layshaft second gear (26T)	1	1	1
10	T930	Layshaft third gear (22T)	1	1	1
11	T1843	Layshaft c/w high gear (20T)	1	1	1
12	T1744	Speedometer pinion, solo (10T)	1	1	1
12	T1747	Speedometer pinion, sidecar (9T)	A	A	A
13	T925	Securing pin	1	1	1
14	T1745	Speedometer gear, solo (15T)	1	1	1
14	T1748	Speedometer gear, sidecar (15T)	A	A	A
15	T825	Thrust washer	1	1	1
16	T933	Speedometer drive bush	1	1	1
17	T948	Rubber sealing ring	1	1	1
18	T448	High gear bearing	1	1	1
19	T489	Circlip	1	1	1
20	T946	Oil seal	1	1	1
21	T1919	Gearbox sprocket (20 teeth) solo	1	–	–
21	T1918	Gearbox sprocket (19 teeth) solo	–	1	1
21	T1917	Gearbox sprocket (18 teeth) side-car	A	–	–
21	T1916	Gearbox sprocket (17 teeth) side-car	–	A	A
22	T440	Gearbox sprocket nut	1	1	1
23	S35–7	Mainshaft bearing	1	1	1
24	T280	Circlip	1	1	1
25	T1338	Pinion sleeve	1	1	1
26	T1250	Pinion spring	1	1	1
27	T730	Kickstarter pinion	1	1	1
28	T731	Kickstarter ratchet	1	1	1
29	T732	Tab washer	1	1	1
30	NT297	Nut	1	1	1
31	T1736	Clutch operating rod	1	1	1

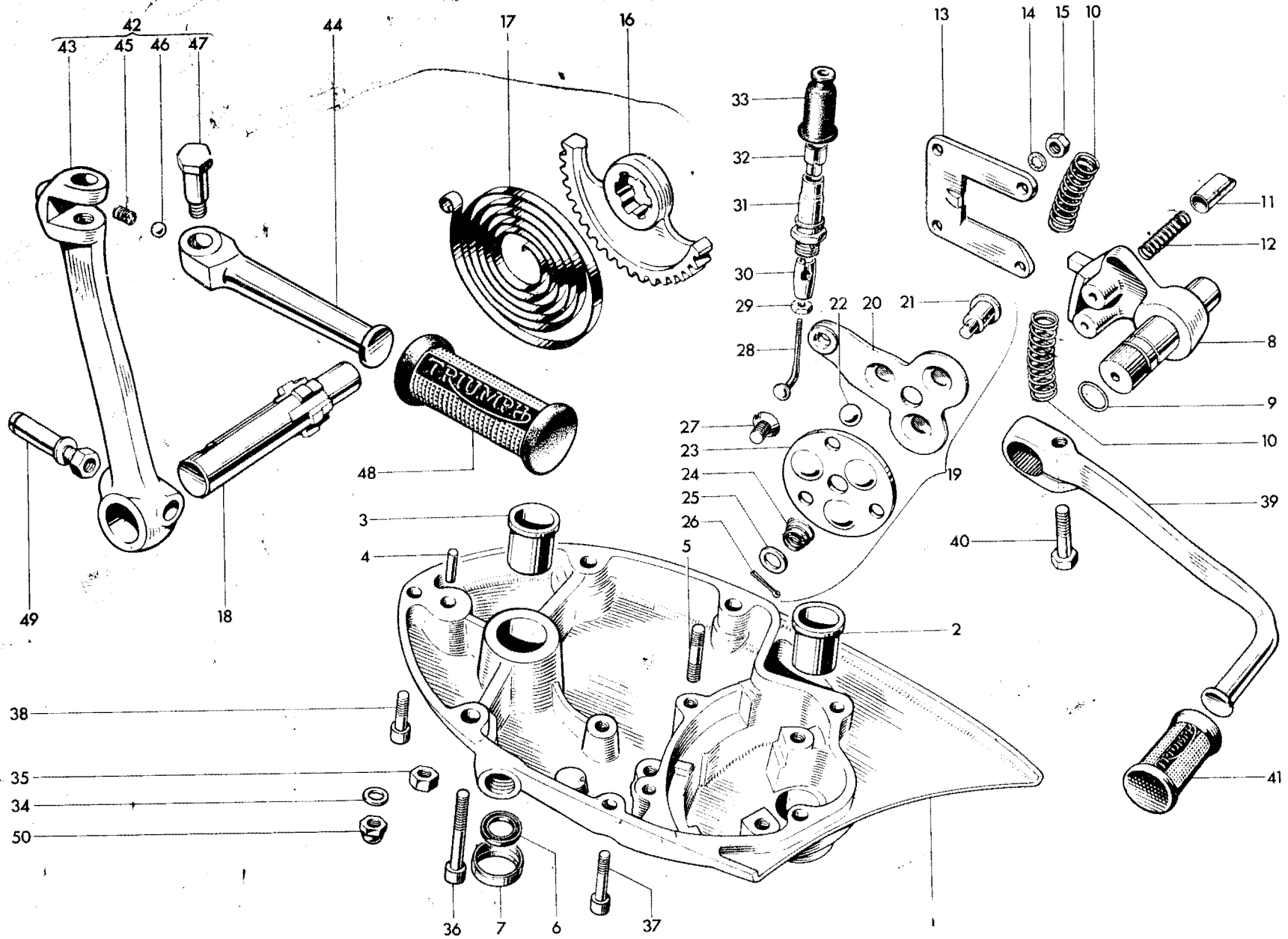

Fig. 9. GEARBOX OUTER COVER

GEARBOX OUTER COVER

Ref. No.	Part No.	DESCRIPTION	QUANTITY 6T	TR6	T120
1	57-1986	GEARBOX OUTER COVER	1	1	1
2	T57	Gearchange spindle bush...	1	1	1
3	T23	Kickstarter spindle bush	1	1	1
4	T47	Kickstarter spring anchor pin	1	1	1
5	T454	Guide plate stud ($\frac{7}{8}$ in. O.A.)	4	4	4
6	T1956	Oil seal	1	1	1
7	T1955	Oil seal housing	1	1	1
8	T408/9	Gearchange quadrant	1	1	1
9	E3309	Rubber "O" ring	1	1	1
10	57-T404	Quadrant return spring	2	2	2
11	57-T406	Gearchange quadrant plunger	2	2	2
12	57-T405	Plunger spring	2	2	2
13	57-T407	Guide plate	1	1	1
14	E1612	Serrated washer	4	4	4
15	F879	Nut	4	4	4
16	T25A	Kickstarter quadrant	1	1	1
17	T31	Kickstarter return spring	1	1	1
18	T24A	Kickstarter axle	1	1	1
19	57-T1707	CLUTCH LEVER ASSEMBLY	1	1	1
20	T1708	Clutch lever	1	1	1
21	T1710	Lever shaft	1	1	1
22	T1771	Ball, $\frac{3}{8}$ in. diam.	3	3	3
23	T1711	Thrust plate	1	1	1
24	T1712	Return spring	1	1	1
25	GS127	Plain washer	1	1	1
26	$\frac{5}{64}$ in. x $\frac{1}{2}$ in.	Split pin	1	1	1
27	57-T1713	Countersunk screw ($\frac{3}{8}$ in. O.A.)	2	2	2
28	57-T1714	Spoke	1	1	1
29	57-T1937	Locknut	1	1	1
30	57-T1946	Connector	1	1	1
31	T1644	Abutment	1	1	1
32	T1645	Adaptor	1	1	1
33	T1646	Rubber cover	1	1	1
34	S25-3	Plain washer	2	2	2
35	S1-51	Nut	1	1	1
36	E3802	Screw ($2\frac{3}{4}$ in. U.H.)	2	2	2
37	E3668	Screw ($1\frac{5}{16}$ in. U.H.)	2	2	2
38	E3204	Screw (1 in. U.H.)	1	1	1
39	T1750	Gearchange pedal	1	1	1
40	W932	Bolt (1 in. U.H.)	1	1	1
41	T449	Pedal rubber	1	1	1
42	T1938	FOLDING KICKSTARTER	1	1	1
43	T1939	Kickstarter lever	1	1	1
44	T1272	Kickstarter pedal	1	1	1
45	T1167	Pedal locating spring	1	1	1
46	S70-3	Steel ball, $\frac{1}{4}$ in. diam.	1	1	1
47	T1273	Pedal bolt	1	1	1
48	F1814	Pedal rubber	1	1	1
49	T1222	Cotter pin c/w nut and washer	1	1	1
50	H1531	Domed nut	1	1	1

CLUTCH ASSEMBLY Nº 1

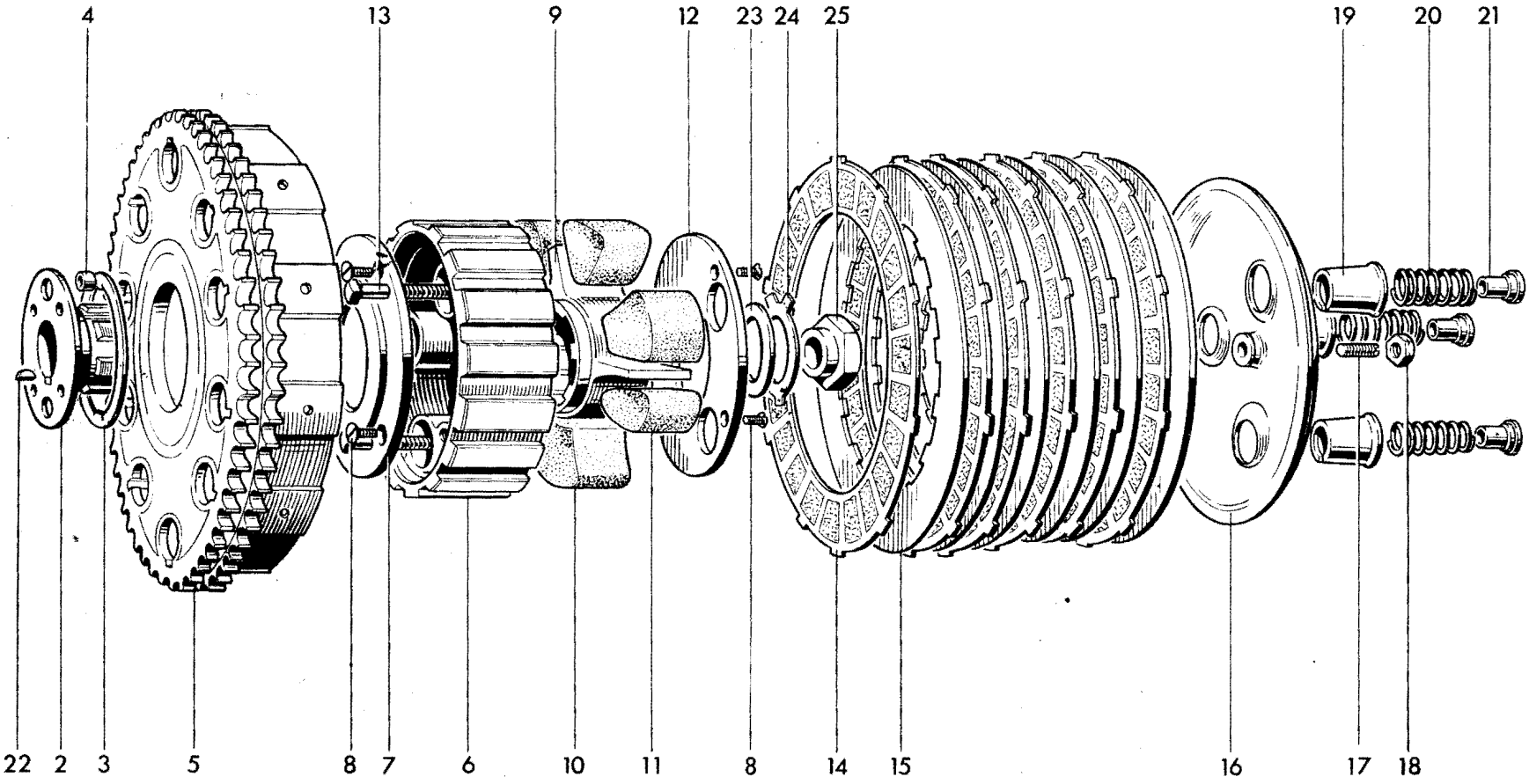

Fig. 10. CLUTCH

Ref. No.	Part No.	DESCRIPTION	QUANTITY		
		CLUTCH			
			6T	TR6	T120
1	T1928	CLUTCH COMPLETE	1	1	1
2	T1734	Hub	1	1	1
3	T1735	Thrust washer	1	1	1
4	T394	Roller	20	20	20
5	T1570	Sprocket and housing (58 teeth Duplex)	1	1	1
6	T1719	Centre	1	1	1
7	T1720	Inner plate	1	1	1
8	T1040	Countersunk screw (0·417 in. U.H.)	6	6	6
9	T1721	Shock absorber spider	1	1	1
10	T1722	Drive rubber (large)	3	3	3
11	T1723	Rebound rubber (small)	3	3	3
12	T1724	Outer plate	1	1	1
13	T423A	Screwed pin ($1\frac{27}{32}$ in. U.H.)	3	3	3
14	T1362	Driving plate (bonded)	6	6	6
15	T1363	Driven plate	6	6	6
16	T1929	Pressure plate	1	1	1
17	T1256	Adjuster pin	1	1	1
18	GS662	Nut	1	1	1
19	T1931	Spring cup	3	3	3
20	T1830	Spring	3	3	3
21	T427	Brass nut	3	3	3
22	S66-1	Key	1	1	1
23	T1045	Cupped washer	1	1	1
24	T1046	Tab washer	1	1	1
25	T1047	Clutch securing nut	1	1	1

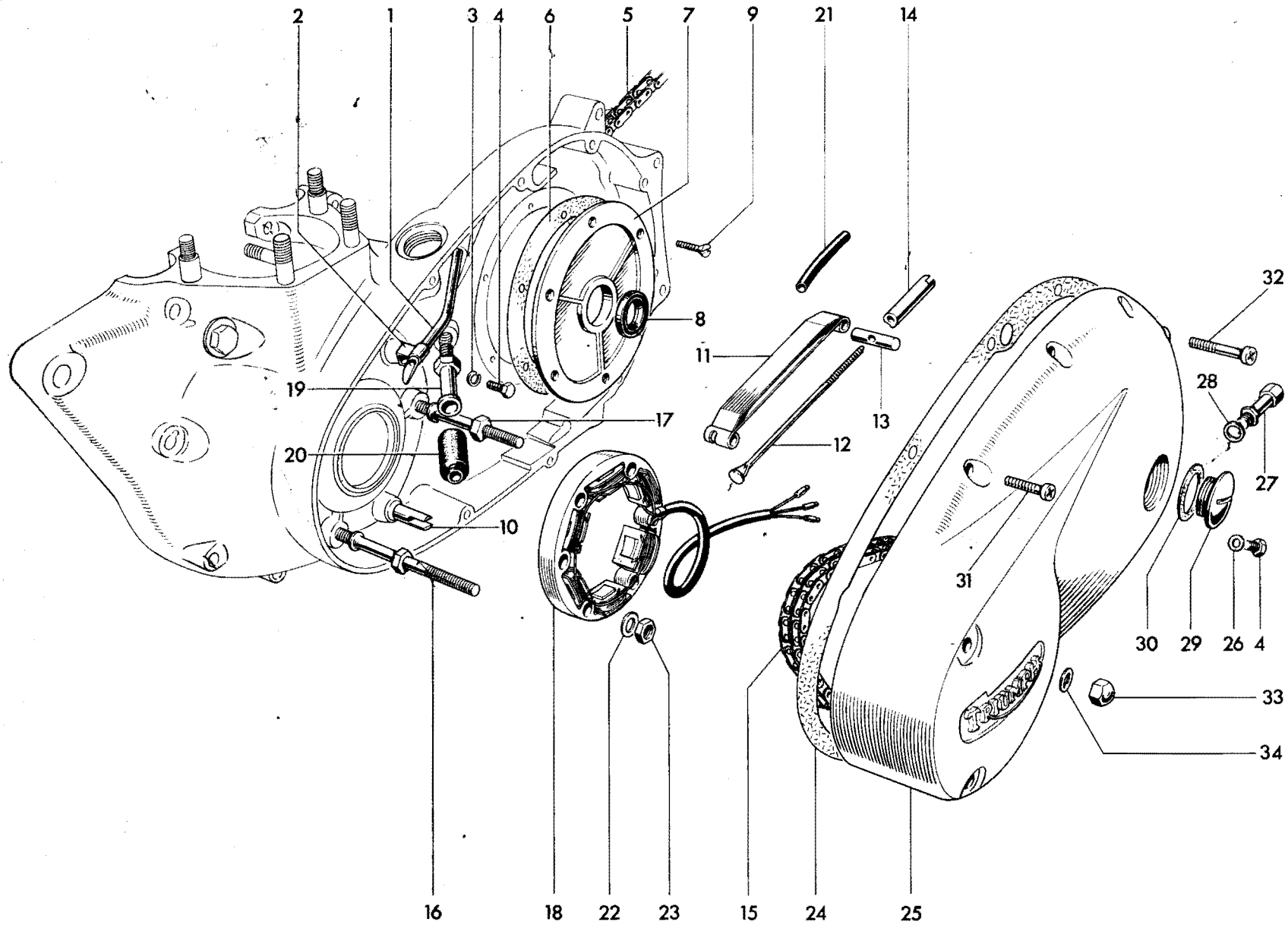

Fig. 11. CHAINCASE AND CHAINS

H = 97-
S = 21 AMERICAN THREADS.

CHAINCASE AND CHAINS

Ref. No.	Part No.	DESCRIPTION	6T	TR6	T120
1	E4704	Primary chain oiler tube	1	1	1
2	E4705	Clip	1	1	1
3	S26–2	Spring washer	1	1	1
4	DS57	Bolt ($\frac{7}{16}$ in. U.H.)	2	2	2
5	D481	Rear chain, $\frac{5}{8}$ in. x $\frac{3}{8}$ in. x 103 links	1	1	1
6	E3832	Joint washer	1	1	1
7	E4577	Cover plate	1	1	1
8	E4578	Oil seal	1	1	1
9	E3821	Countersunk screw ($\frac{5}{16}$ in. U.H.)	6	6	6
10	E4147	Chain tensioner abutment	1	1	1
11	E4149 70-6061	Chain tensioner blade	1	1	1
12	E4152	Tie rod	1	1	1
13	E4145 ~~5977~~	Trunnion 70-5977	1	1	1
14	E4153 70-9703	Adjuster sleeve nut	1	1	1
15	D477	Primary chain, $\frac{3}{8}$ in. Duplex x 84 links	1	1	1
16	E4536	Stator stud	2	2	2
17	E4537	Stator stud	1	1	1
18	47162	Stator, RM 19 } 47204	1	–	–
18	47164	Stator, RM 19 } 47204	–	1	1
19	E4772	Sleeve nut	1	1	1
20	E4144	Rubber grommet	1	1	1
21	E5449	Plastic sleeve	1	1	1
22	S25–3	Plain washer	3	3	3
23	E5324	Self-locking nut	3	3	3
24	T1770	Joint washer	1	1	1
25	T1727	Chaincase	1	1	1
26	E2441	Copper washer	1	1	1
27	E4922	Drain and adjuster plug	1	1	1
28	T1738	Fibre washer	1	1	1
29	E732	Filler plug	1	1	1
30	NE507	Fibre washer	1	1	1
~~31~~ 32	E4806	Screw ($\frac{29}{32}$ in. U.H.)	2	2	2
~~32~~ 31	E3204	Screw (1 in. U.H.)	6	6	6
33	H1531	Domed nut	2	2	2
34	F1880	Copper washer	2	2	2

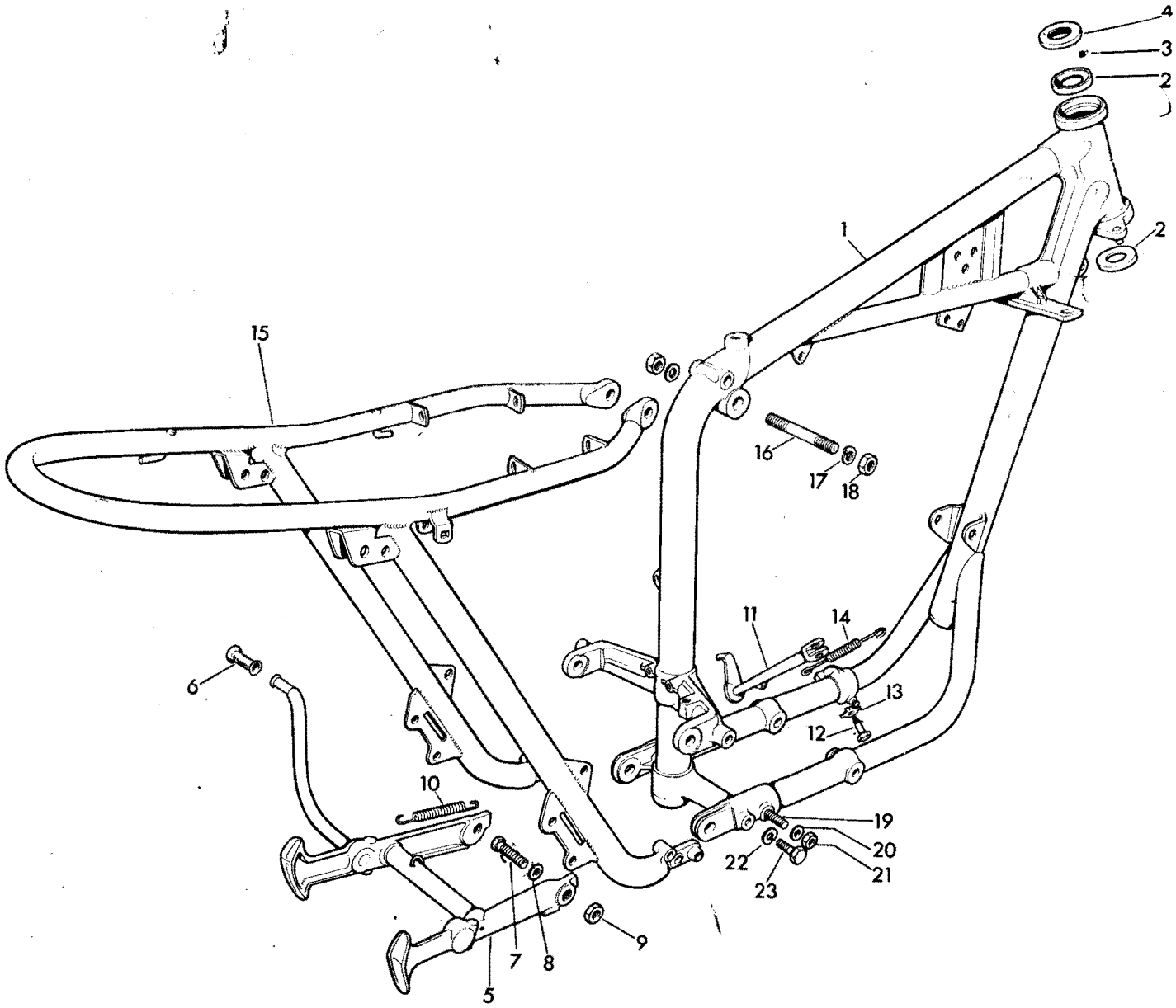

Fig. 12. **FRAME**

Ref. No.	Part No.	DESCRIPTION	QUANTITY		
		FRAME			
			6T	TR6	T120
1	F5448	Front frame	1	1	1
2	H111	Steering race cup	2	2	2
3	S70–3	Steel ball ($\frac{1}{4}$ in. diam.)	40	40	40
4	H1018	Top cone and dust cover	1	1	1
5	F5928	Centre stand (3·50 rear tyre)...	1	–	1
5	F5932	Centre stand (4·00 rear tyre)...	–	1	–
6	T449	Pedal rubber	1	1	1
7	F5678	Pivot bolt	2	2	2
8	F5679	Plain washer	2	2	2
9	F2725	Nut	2	2	2
10	F4671	Return spring	1	1	1
11	F4388	PROP STAND COMPLETE (3·50 rear tyre)	1	–	1
11	F4712	PROP STAND COMPLETE (4·00 rear tyre)	–	1	–
12	F3097	Pivot bolt	1	1	1
13	F3096	Tab washer	1	1	1
14	F2610	Return spring	1	1	1
15	F5449	Rear frame	1	1	1
16	F4510	Stud ($4\frac{3}{8}$ in. O.A.) (when panels are fitted)	1	–	–
16	F2842	Stud ($3\frac{7}{8}$ in. O.A.)	–	1	1
17	S26–1	Spring washer	2	2	2
18	S1–52	Nut	2	2	2
19	F5411	Bolt (3 in. U.H.)	2	2	2
20	S25–6	Plain washer	2	2	2
21	DS47	Nut	2	2	2
22	PCW73A	Spring washer	2	2	2
23	F5605	Bolt ($1\frac{3}{16}$ in. U.H.)	2	2	2

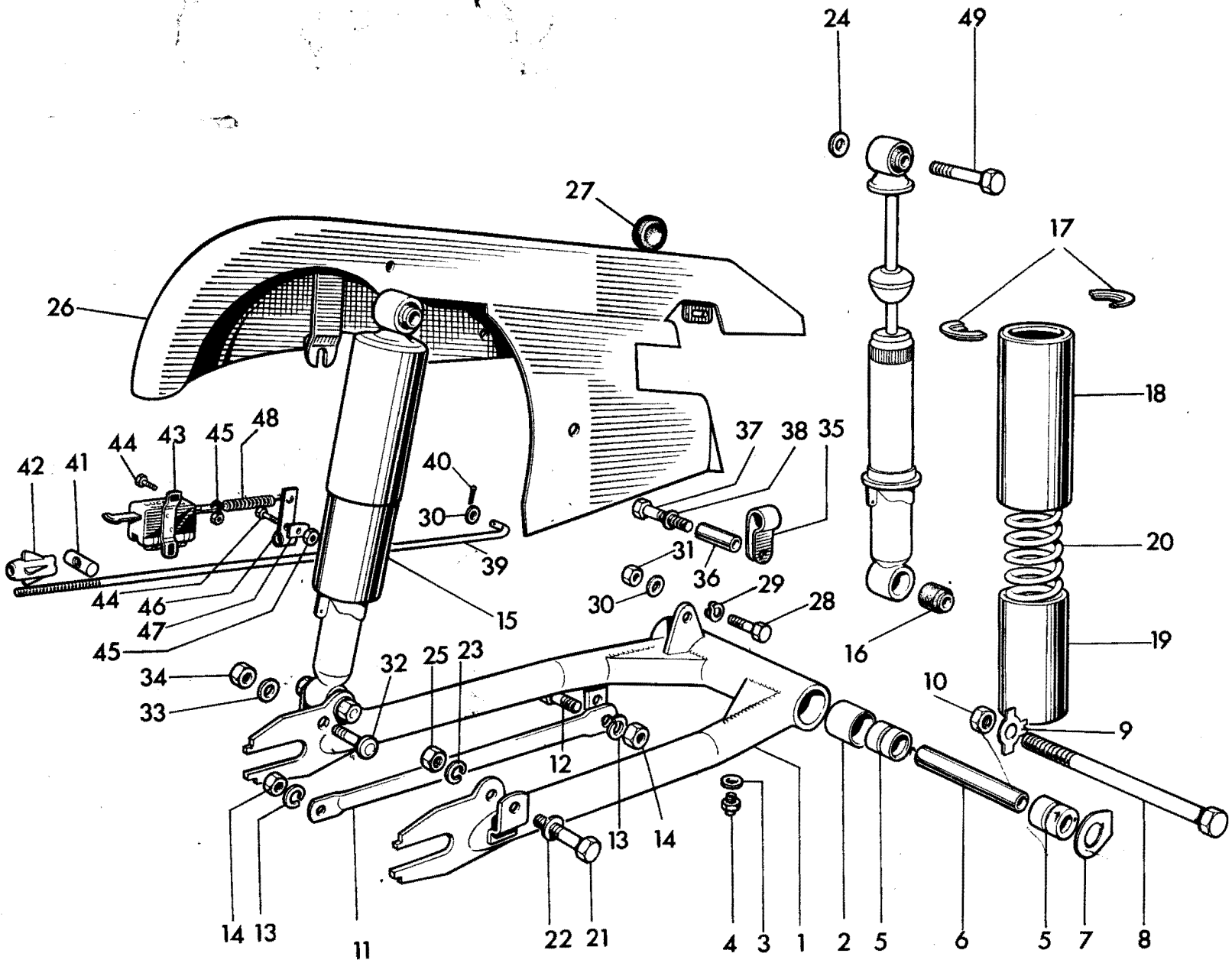

Fig. 13. SWINGING FORK AND SUSPENSION UNITS

Ref. No.	Part No.	DESCRIPTION	QUANTITY		
		SWINGING FORK AND SUSPENSION UNITS	6T	TR6	T120
1	F5302	SWINGING FORK	1	1	1
2	F6042	Pivot bush	2	2	2
3	NW100	Grease nipple	1	1	1
4	WE170	Fibre washer	1	1	1
5	F5312	Sleeve	2	2	2
6	F5313	Distance tube	1	1	1
7	F5311	End plate	2	2	2
8	F6150	Bolt ($8\frac{5}{8}$ in. U.H.)	1	1	1
9	F5944	Tab washer	1	1	1
10	NT297	Nut	1	1	1
11	F3774	Brake torque stay	1	1	1
12	F5315	Bolt ($\frac{27}{32}$ in. U.H.)	1	1	1
13	PCW73A	Spring washer	2	2	2
14	DS47	Nut	2	2	2
15	†64054506	SUSPENSION UNIT	2	–	2
15	†64054164	SUSPENSION UNIT	–	2	–
16	9054/316A	Bonded bush	4	4	4
17	9054/171	Spring retainer	4	4	4
18	9054/151	Outer dirt shield	2	2	2
19	9054/47	Inner dirt shield	2	2	2
20	SA253/5	Spring, 145 lbs. Blue/Yellow	2	–	2
20	9054/280	Spring, 100 lbs. Green/Green	–	2	–
21	E2113	Unit fixing bolt ($1\frac{5}{16}$ in. U.H.)	3	4	4
22	S25–2	Plain washer	2	2	2
23	S26–1	Spring washer	2	2	2
24	GS308	Plain washer	–	2	2
25	P0172A	Nut	2	4	4
26	F5737	Chainguard	1	1	1
27	F5536	Grommet	1	1	1
28	F4135	Pivot bolt	1	1	1
29	F2277	Spring washer	1	1	1
30	S25–13	Plain washer	2	2	2
31	E5269	Self-locking nut	1	1	1
32	F4136	Stepped bolt	1	1	1
33	S25–3	Plain washer	1	1	1
34	S1–51	Nut	1	1	1
35	F3808	Clip	1	1	1
36	F5741	Distance piece	1	1	1
37	E3872	Bolt ($1\frac{1}{2}$ in. U.H.)	1	1	1
38	S26–2	Spring washer	1	1	1
39	F3597	Brake operating rod	1	1	1
40	$\frac{1}{16}$ in. x $\frac{3}{8}$ in.	Split pin	1	1	1
41	W11	Pivot pin	1	1	1
42	F4585	Adjuster nut	1	1	1
43	~~31437~~ 54033234	Stop lamp switch, type 22B	1	1	1
44	T1076	Screw ($\frac{3}{8}$ in. U.H.)	3	3	3
45	F4717	Self locking nut	3	3	3
46	F5412	Switch lever	1	1	1
47	F5413	"D" washer	1	1	1
48	315738	Spring (F.3158)	1	1	1
49	F5729	Bolt	1	–	–
	†SB4/275	Sidecar suspension unit	as required		

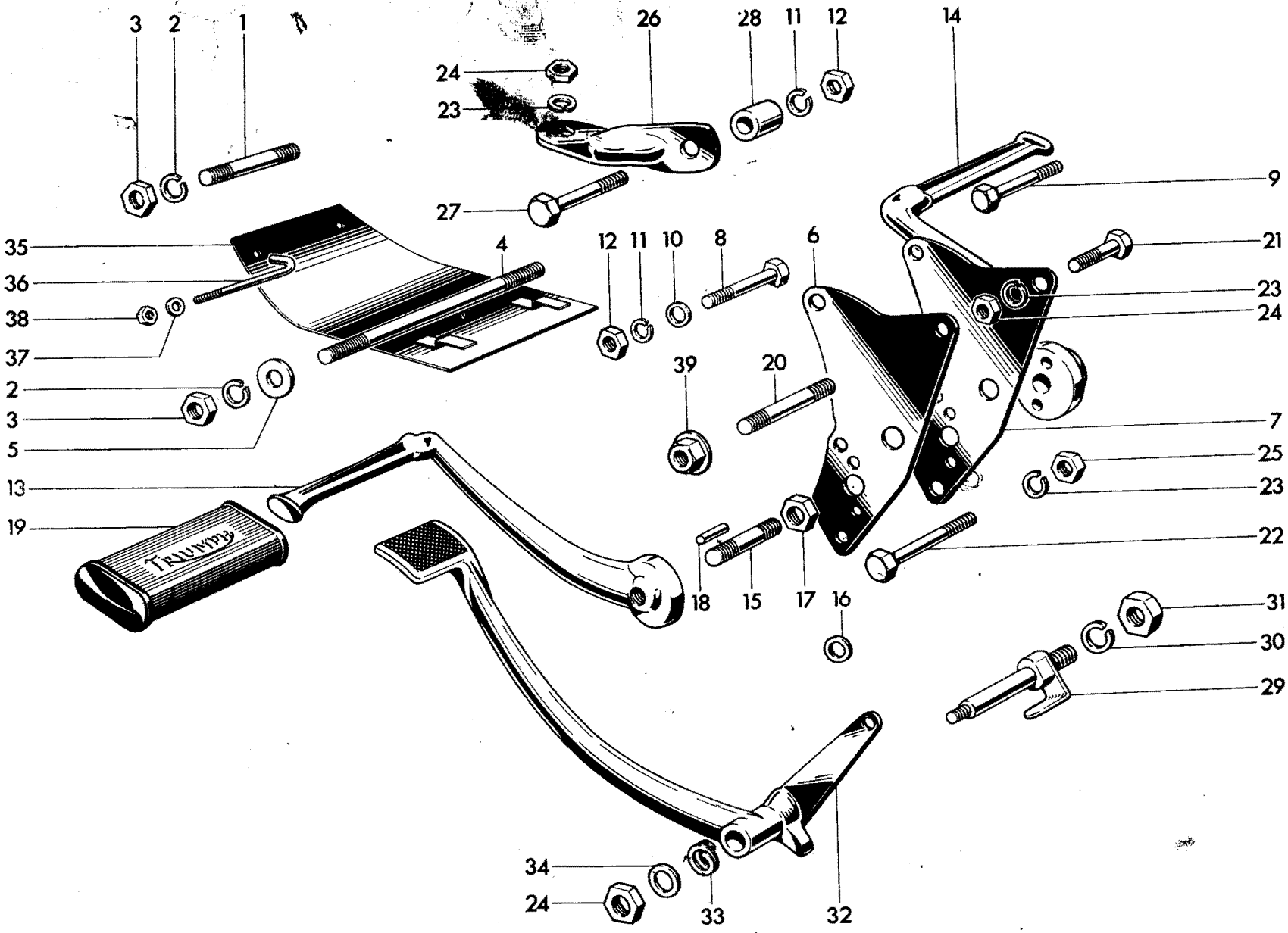

Fig. 14. ENGINE UNIT FITTINGS AND FOOTRESTS

ENGINE UNIT FITTINGS AND FOOTRESTS

Ref. No.	Part No.	DESCRIPTION	QUANTITY		
			6T	TR6	T120
1	F5469	Stud (3 5/16 in. O.A.)	1	1	1
2	PCW73A	Spring washer	4	4	4
3	DS47	Nut	4	4	4
4	F5259	Stud (8 3/16 in. O.A.)	1	1	1
5	F5532	Distance piece	2	2	2
6	F5907	Left rear engine plate	1	1	1
7	F5908	Right rear engine plate	1	1	1
8	E4165	Bolt (1 1/16 in. U.H.)	2	2	2
9	F5316	Bolt (1 7/8 in. U.H.)	2	2	2
10	S25–3	Plain washer	4	4	4
11	S26–3	Spring washer	6	6	6
12	SI–51	Nut	6	6	6
13	F5909	Left footrest	1	1	1
14	F5910	Right footrest	1	1	1
15	F5942	Stud (1 9/16 in. O.A.)	2	2	2
16	S25–6	Plain washer	2	2	2
17	S4–13	Nut	2	2	2
18	F5943	Peg	4	4	4
19	NF704	Footrest rubber	2	2	2
20	F5351	Stud (1 29/32 in. O.A.)	2	–	–
20	E3114	Stud (1 3/16 in. O.A.)	–	2	2
21	H211	Bolt (1 5/16 in. U.H.)	–	1	1
21	H426	Bolt (29/32 in. U.H.)	2	1	1
22	F1760	Bolt (1 1/16 in. U.H.)	2	2	2
23	S26–1	Spring washer	8	8	8
24	S1–52	Nut	7	7	7
25	P0172A	Nut	2	2	2
26	E4778	Engine torque stay	4	4	4
27	F3805	Bolt (1 5/16 in. U.H.)	2	2	2
28	F3069	Distance piece	4	4	4
29	F5604	Brake pedal spindle	1	1	1
30	SCZ45	Spring washer	1	1	1
31	DS48	Nut	1	1	1
32	F5242	Brake pedal	1	1	1
33	S26–16	Spring washer	1	1	1
34	S25–2	Plain washer	1	1	1
35	F5472	Crankcase undershield	–	1	–
36	F5788	Hook bolt	–	2	–
37	S25–1	Plain washer	–	2	–
38	F879	Nut	–	2	–
39	F3771	Nut	2	2	2

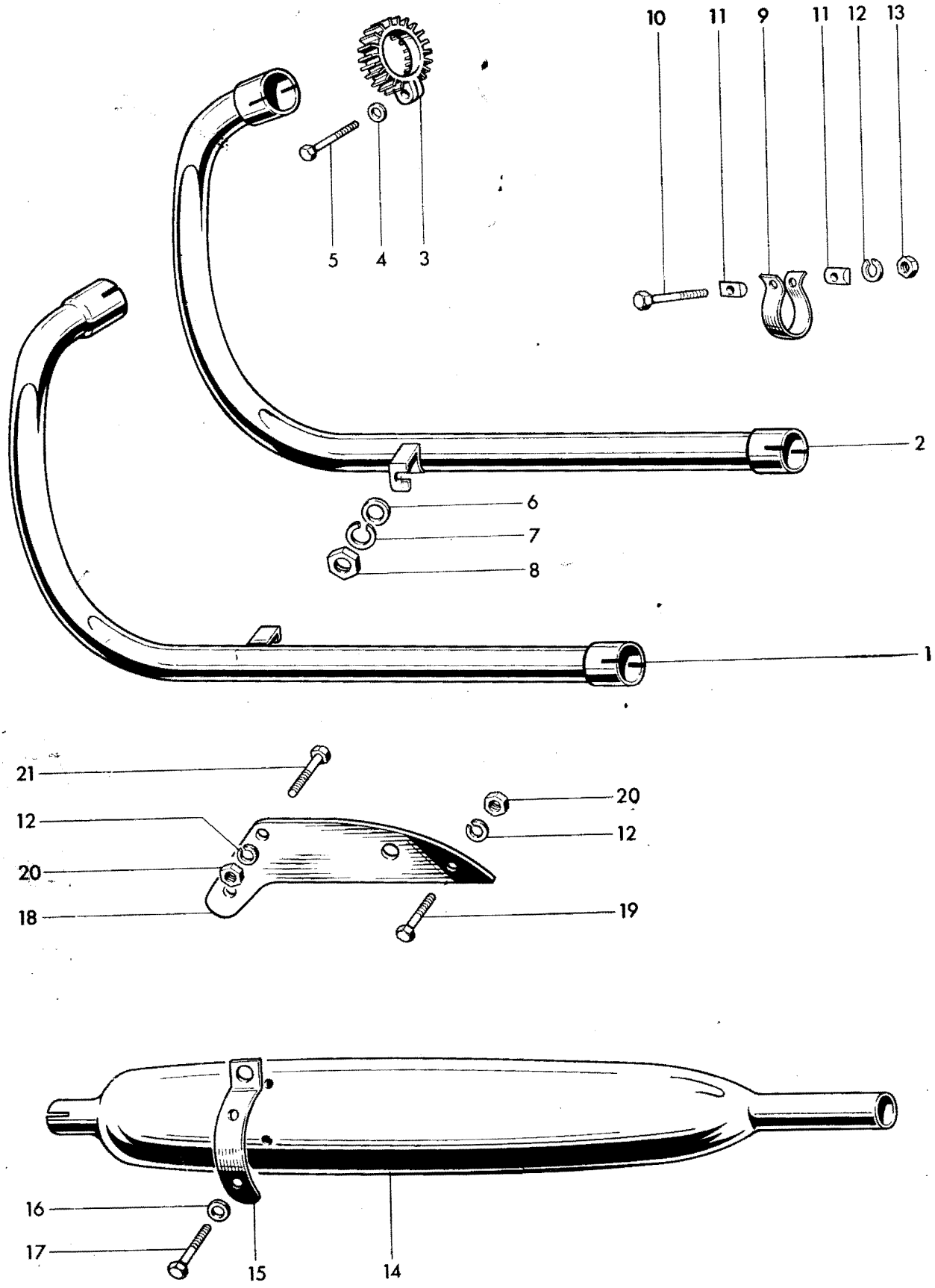

Fig. 15. EXHAUST PIPES AND SILENCERS

Ref. No.	Part No.	DESCRIPTION	QUANTITY		

EXHAUST PIPES AND SILENCERS

			6T	TR6	T120
1	E4716	Left exhaust pipe	1	1	1
2	E4718	Right exhaust pipe	1	1	1
3	E4501	Finned clip	2	2	2
4	E410A	Hemispherical washer	2	2	2
5	E409	Bolt ($1\frac{3}{16}$ in. U.H.)	2	2	2
6	F4370	Plain washer	1	1	1
7	PCW73A	Spring washer	2	2	2
8	DS47	Nut	2	2	2
9	E2271	Clip	2	2	2
10	F3430	Bolt ($1\frac{3}{4}$ in. U.H.)	2	2	2
11	E3768	"D" washer	4	4	4
12	S26–3	Spring washer	8	8	8
13	E1310	Nut	2	2	2
14	E4949	Silencer	2	2	2
15	E4951	Bracket	2	2	2
16	S25–3	Plain washer	4	4	4
17	F929	Bolt ($\frac{1}{2}$ in. U.H.)	4	4	4
18	E4711	Pillion footrest support	2	2	2
19	F2335	Bolt ($1\frac{1}{16}$ in. U.H.)	2	2	2
20	SI–51	Nut	6	6	6
21	DS58	Bolt ($\frac{27}{32}$ in. U.H.)	2	2	2

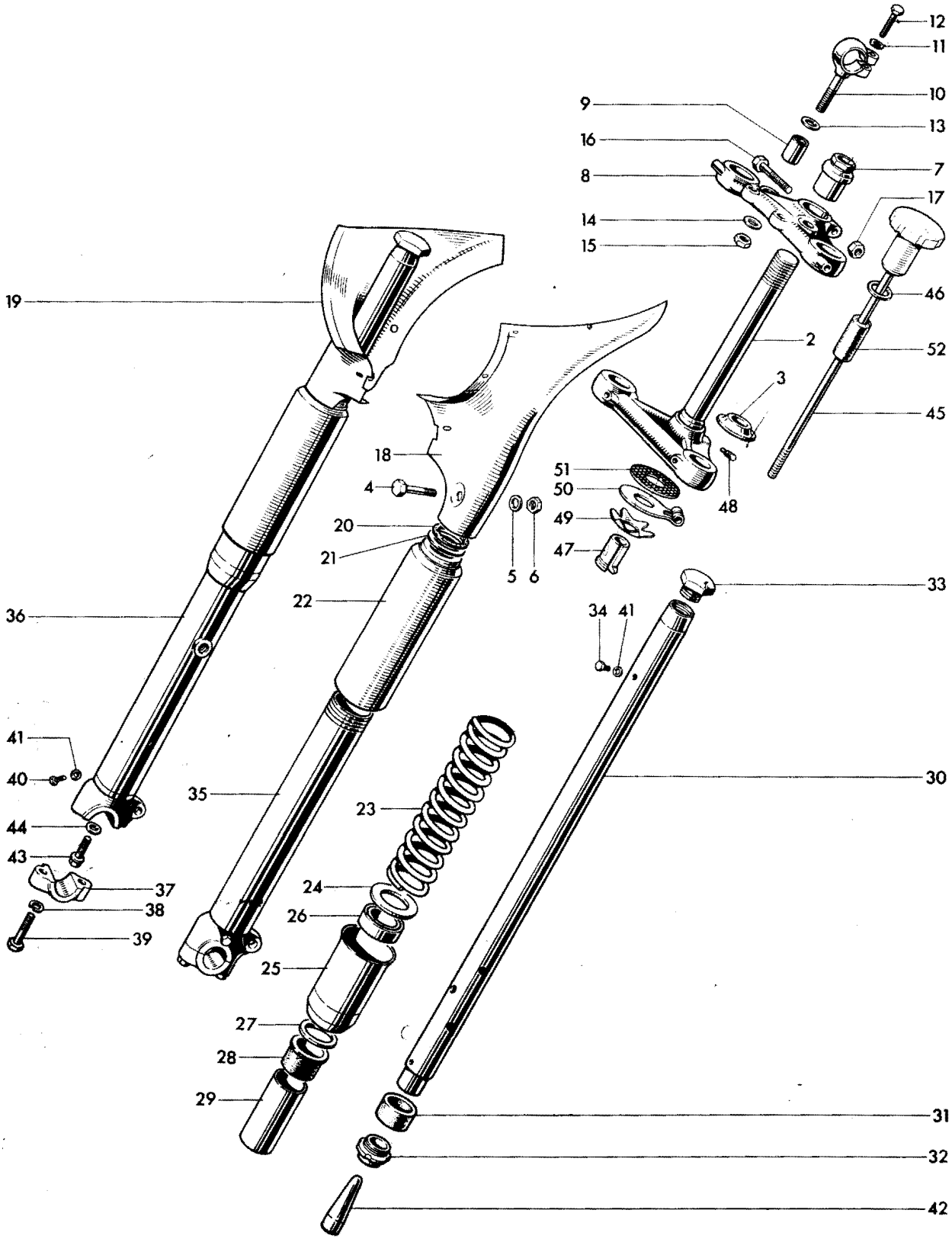

Fig. 16. TELESCOPIC FRONT FORK, 6T

Ref. No.	Part No.	DESCRIPTION	QUANTITY
		TELESCOPIC FRONT FORK, 6T	6T
1	H1727	FORK ASSEMBLY	1
2	H1577	Middle lug and stem	1
3	H439	Bottom cone	1
4	H941	Pinch bolt ($2\frac{1}{4}$ in. U.H.)	2
5	S25–2	Plain washer	2
6	E2412	Nut	2
7	H1141	Fork stem sleeve nut	1
8	H1528	TOP LUG ASSEMBLY	1
9	H1527	Bonded bush	2
10	H1523	Handlebar eyebolt	2
11	F1335	Plain washer	2
12	H1340	Bolt ($1\frac{1}{2}$ in. U.H.)	2
13	H1708	Plain washer	2
14	H1529	Hemispherical washer	2
15	F3955	Self locking nut	2
16	F1760	Pinch bolt ($1\frac{1}{16}$ in. U.H.)	1
17	H379	Seated nut	1
18	H1290	Left nacelle cover	1
19	H1291	Right nacelle cover	1
20	H1756	Felt washer	2
21	H1745	Plain washer	2
22	H1661	Upper cover tube	2
23	H1660	Solo main spring (Unpainted)	2
23	H1697	Sidecar main spring (Yellow/White)	2
24	H1656	Plain washer	2
25	H1654	DUST EXCLUDER SLEEVE NUT	2
26	H1500	Oil seal	2
27	H431	Plain washer	2
28	H441	Top bearing	2
29	H1653	Damping sleeve	2
30	H1695	STANCHION c/w BEARING	2
31	H443	Lower bearing	2
32	H1058	Bearing nut	2
33	H1659	Cap nut	2
34	H519A	Oil filler plug ($\frac{3}{16}$ in.)	2
35	H1650	LEFT BOTTOM MEMBER c/w CAP	2
36	H1651	RIGHT BOTTOM MEMBER c/w CAP	1
37	H1053	Spindle cap	2
38	S26–3	Spring washer	1
39	H1070	Cap bolt ($1\frac{7}{16}$ in. U.H.)	4
40	H1071	Drain plug	2
41	H430	Fibre washer	4
42	H1499	Restrictor	2
43	H1063	Flanged bolt ($\frac{23}{32}$ in. U.H.)	2
44	H1062	Aluminium washer	2
45	H1142	Steering damper rod c/w knob	1
46	H565	Plain washer	1
47	H408	Adjuster sleeve	1
48	H1286	Locating pin	1
49	H95	Spring plate	1
50	H413	Anchor plate	1
51	H435	Friction disc	1
52	H1618	Rubber sleeve	1

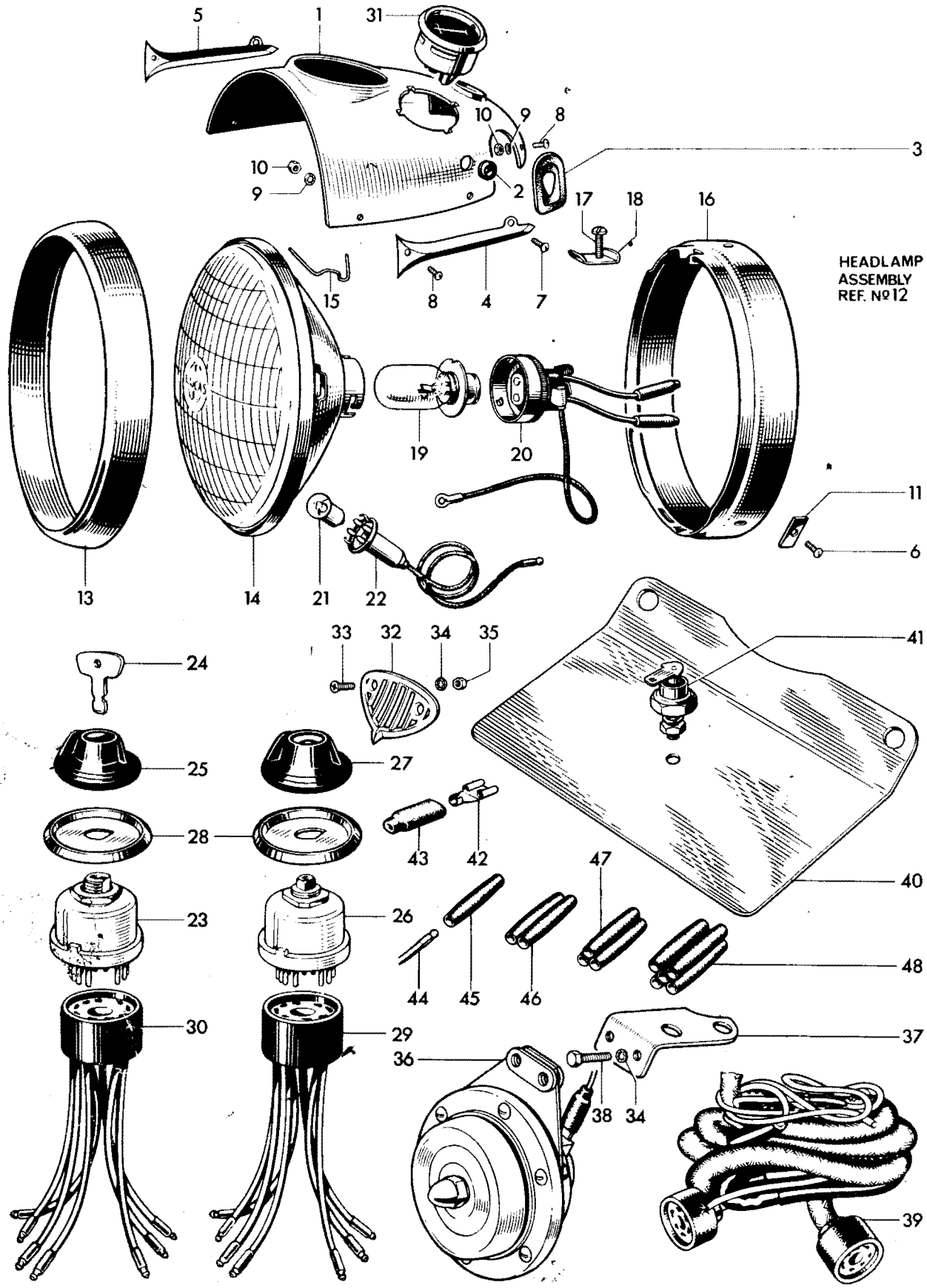

Fig. 17. NACELLE HEADLAMP AND SWITCHES

Ref. No.	Part No.	DESCRIPTION	QUANTITY

NACELLE HEADLAMP AND SWITCHES

			6T
1	H1781	Nacelle top	1
2	H961	Rubber grommet	3
3	H669	Rubber grommet	2
4	H877	Left motif	1
5	H878	Right motif	1
6	H689	Screw ($\frac{1}{4}$ in. U.H.)	4
7	H687	Screw ($\frac{3}{8}$ in. U.H.)	2
8	H688	Screw ($\frac{5}{16}$ in. U.H.)	2
9	E2880	Serrated washer	4
10	H691	Nut	4
11	H690	Nut	2
12	59176	HEADLAMP	1
13	553248	Rim	1
14	516812	Light unit	1
15	504665	Fixing wire	6
16	553267	Fixing ring	1
17	144921	Screw	1
18	534296	Plate	1
19	414	Bulb (50/40 W. L.H. dipping. Pre-focus)	1
20	554602	Adaptor	1
21	222	Bulb (4W.M.C.C.)	1
22	554710	Pilot bulbholder	1
23	34427	IGNITION SWITCH c/w KEY, type 88SA	1
24	54336176	Ignition key	1
25	54336178	Ignition switch cover	1
26	34289	Lighting switch, type 88SA	1
27	54330934	Knob c/w screw	1
28	54330576	Switch bezel plate	2
29	54930007	Replacement harness socket (lighting)	A
30	54930008	Replacement harness socket (ignition)	A
31	36296	Ammeter, type 2AR	1
32	H992	Horn grille	1
33	H993	Screw (0·540 in. U.H.)	2
34	GS299	Serrated washer	4
35	F3799	Nut	2
36	H1420	Horn bracket	1
37	70164	Horn, type 8H	1
38	F4771	Bolt ($\frac{1}{2}$ in. U.H.)	2
39	54094523	Wiring harness	1
40	F5762	Mounting plate	1
41	49345	Zener diode	1
42	54942078	Lucar connector	2
43	54190042	Insulating cover	2
44	900269	Snap connector terminal	as required
45	900288	Single snap connector	as required
46	850641	Double snap connector	as required
47	850844	Triple snap connector	as required
48	850832	Quintuple snap connector	as required

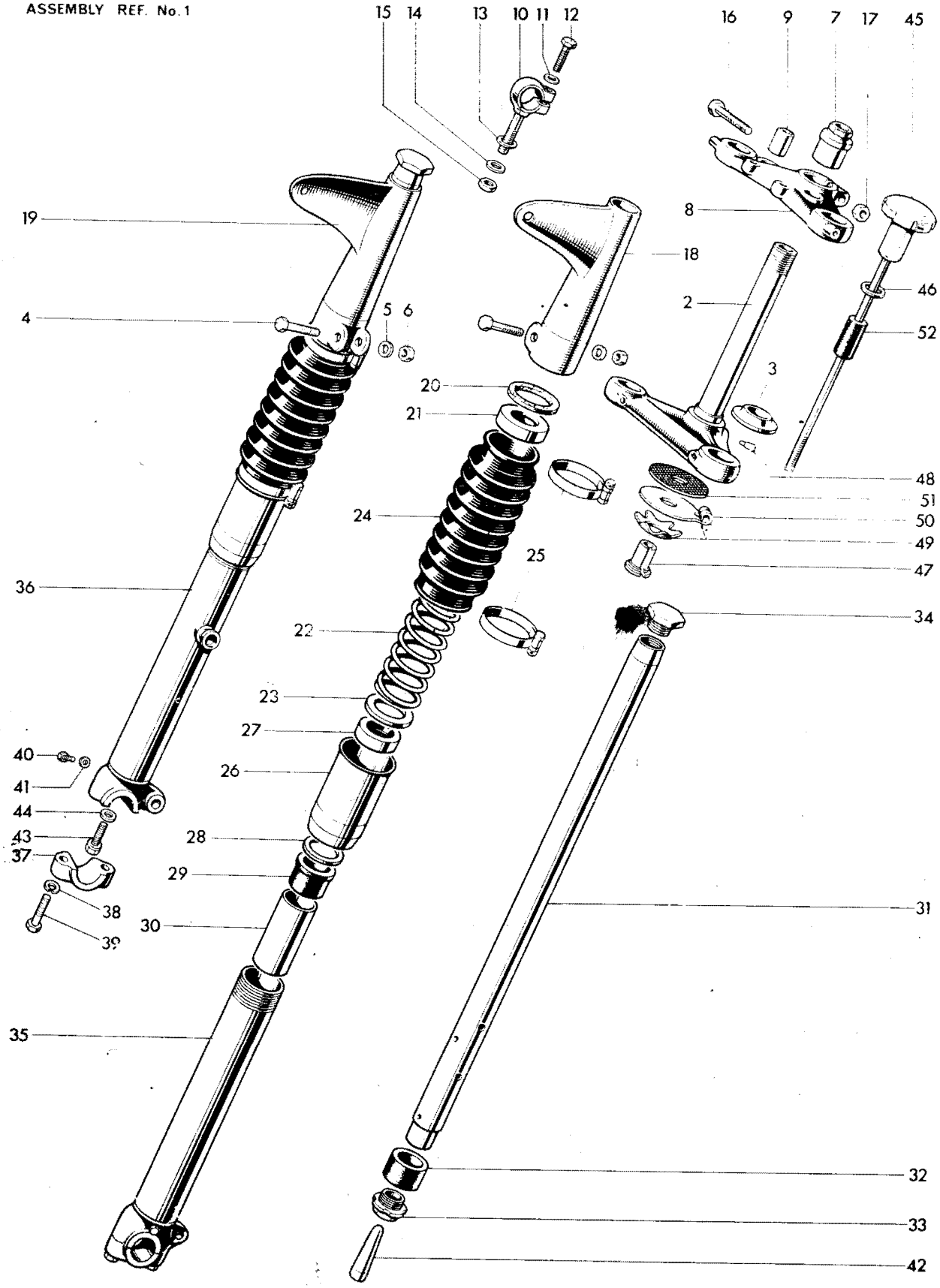

FIG. 18. TELESCOPIC FRONT FORK, TR6 AND T120

TELESCOPIC FRONT FORK, TR6 AND T120

Ref. No.	Part No.	DESCRIPTION	TR6	T120
1	H1715	FORK ASSEMBLY	1	1
2	H1577	Middle lug and stem	1	1
3	H439	Bottom cone	1	1
4	H941	Pinch bolt (2¼ in. U.H.)	2	2
5	S25–2	Plain washer	2	2
6	E2412	Nut	2	2
7	H405	Fork stem sleeve nut	1	1
8	H1528A	TOP LUG ASSEMBLY	2	2
9	H1527	Bonded bush	2	2
10	H1523	Handlebar eyebolt	2	2
11	F1335	Plain washer	2	2
12	H1340	Bolt (1⅛ in. U.H.)	2	2
13	H1708	Plain washer	2	2
14	H1529	Hemispherical washer	2	2
15	F3955	Self-locking nut	2	2
16	F1760	Pinch bolt (1 11/16 in. U.H.)	1	1
17	H379	Seated nut	1	1
18	H1646	Left top cover	1	1
19	H1647	Right top cover	1	1
20	H1756	Felt washer	2	2
21	H1657	Spring abutment	2	2
22	H1660	Solo main spring (Unpainted)	2	2
22	H1697	Sidecar main spring (Yellow/White)	2	2
23	H1656	Plain washer	2	2
24	H1645	Telescopic gaiter	2	2
25	D340	Gaiter clip	4	4
26	H1654	DUST EXCLUDER SLEEVE NUT	2	2
27	H1500	Oil seal	2	2
28	H431	Plain washer	2	2
29	H441	Top bearing	2	2
30	H1653	Damping sleeve	2	2
31	~~H1649~~ 1389	STANCHION c/w BEARING	2	2
32	H443	Lower bearing	2	2
33	H1058	Bearing nut	2	2
34	H1658	Cap nut	2	2
35	H1650	LEFT BOTTOM MEMBER c/w CAP	1	1
36	H1651	RIGHT BOTTOM MEMBER c/w CAP	1	1
37	H1053	Spindle cap	2	2
38	S26–3	Spring washer	4	4
39	H1070	Cap bolt (1 7/16 in. U.H.)	4	4
40	H1071	Drain plug	2	2
41	H430	Fibre washer	2	2
42	H1499	Restrictor	2	2
43	H1063	Flanged bolt (23/32 in. U.H.)	2	2
44	H1062	Aluminium washer	2	2
45	H1142	Steering damper rod c/w knob	1	1
46	H565	Plain washer	1	1
47	H408	Adjuster sleeve	1	1
48	H1286	Locating pin	1	1
49	H95	Spring plate	1	1
50	H413	Anchor plate	1	1
51	H435	Friction disc	1	1
52	H1618	Rubber sleeve	1	1

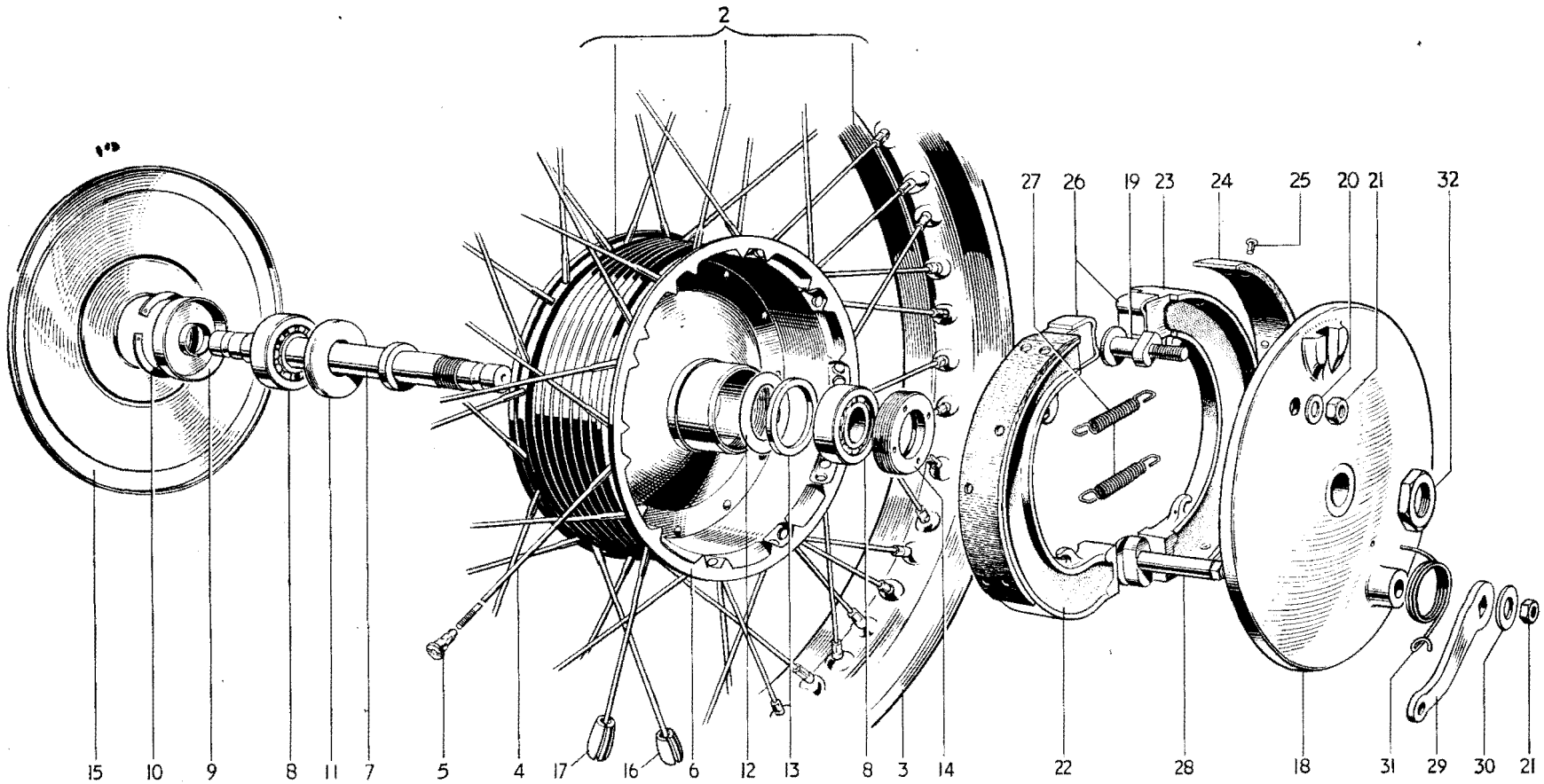

Fig. 19. FRONT WHEEL

Ref. No.	Part No.	DESCRIPTION	QUANTITY		
		FRONT WHEEL			
			6T	TR6	T120
1	W1399	FRONT WHEEL COMPLETE	1	–	1
1	W1323	FRONT WHEEL COMPLETE	–	1	–
2	W1371	RIM, SPOKES AND HUB ASSEMBLY	1	–	1
2	W1324	RIM, SPOKES AND HUB ASSEMBLY	–	1	–
3	W1374	Front wheel rim (WM2–18)	1	–	1
3	W1230	Front wheel rim (WM2–19)	–	1	–
4	W1275	Spoke (8/10G x $5\frac{1}{16}$ in. straight) c/w nipple	40	–	40
4	W1328	Spoke (8/10G x $5\frac{5}{8}$ in. straight) c/w nipple	–	40	–
5	S79–2	Spoke nipple	40	40	40
6	W1325	Hub and brake drum	1	1	1
7	W1239	Wheel spindle	1	1	1
8	W653	Bearing	2	2	2
9	W1237	Dust cover	1	1	1
10	T280	Circlip	1	1	1
11	W1481	Grease retainer	1	1	1
12	W1474	Grease retainer (brake side)	1	1	1
13	W1238	Backing ring	1	1	1
14	W582	Retaining ring	1	1	1
15	W1332	Cover plate	1	1	1
16	W1197	Balance weight, $\frac{1}{2}$ oz.		as required	
17	W1198	Balance weight, 1 oz.		as required	
18	W1330	Brake anchor plate	1	1	1
19	W1302	Fulcrum pin	1	1	1
20	S25–2	Plain washer	1	1	1
21	S1–52	Nut	2	2	2
22	W1410	LEADING BRAKE SHOE c/w LINING	1	1	1
23	W1411	TRAILING BRAKE SHOE c/w LINING	1	1	1
24	W1414	Brake lining	2	2	2
25	W129	Brass rivet	16	16	16
26	W1415	Pivot pad	2	2	2
27	W135	Shoe return spring	2	2	2
28	W1243	Brake cam	1	1	1
29	W1331X	Brake cam lever	1	1	1
30	S25–6	Plain washer	1	1	1
31	W592	Lever return spring	1	1	1
32	W1246	Anchor plate nut	1	1	1

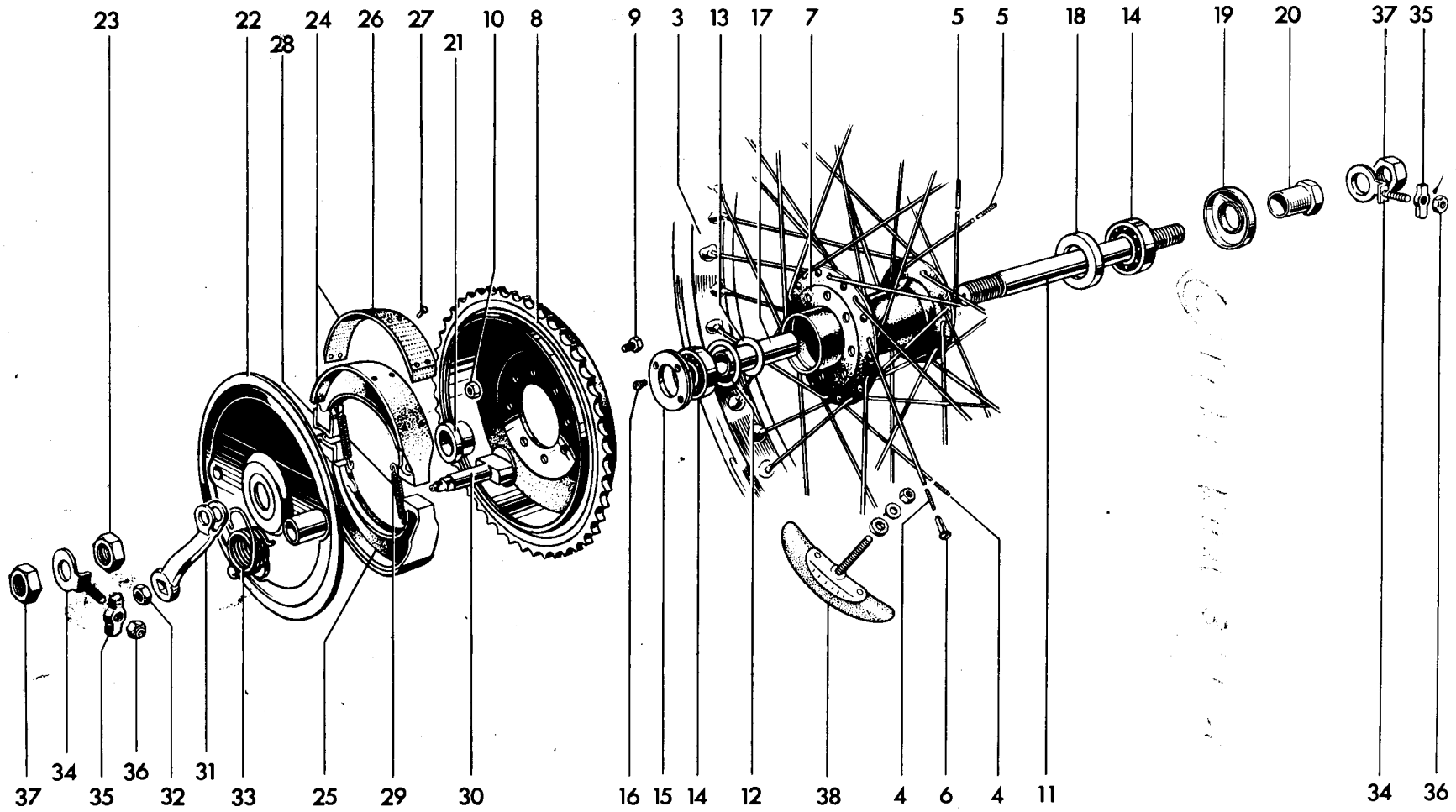

Fig. 20. REAR WHEEL

REAR WHEEL

Ref. No.	Part No.	DESCRIPTION	QUANTITY 6T	TR6	T120
1	W1469	REAR WHEEL COMPLETE	1	–	1
1	W1491	REAR WHEEL COMPLETE	–	1	–
2	W1470	RIM, SPOKES AND HUB ASSEMBLY	1	–	1
2	W1486	RIM, SPOKES AND HUB ASSEMBLY	–	1	–
3	W1471	Rear wheel rim (WM2–18)	1	–	1
3	W1007	Rear wheel rim (WM3–18)	–	1	–
4	W1107	Spoke (8/10G x 7 9/16 in. 90°) c/w nipple	20	20	20
5	W1108	Spoke (8/10G x 7 7/8 in. 90°) c/w nipple	20	20	20
6	S79–2	Spoke nipple	40	40	40
7	W1472	Hub	1	1	1
8	W951	Sprocket and brake drum (46T)	1	1	1
9	W62	Sprocket to hub bolt (11/16 in. U.H.)	8	8	8
10	W1495	Self-locking nut	8	8	8
11	W1281	Wheel spindle	1	1	1
12	W1022	Backing ring	1	1	1
13	W1474	Grease retainer	1	1	1
14	W653	Bearing	2	2	2
15	W1021	RETAINER RING	1	1	1
16	W1079	Locking screw (5/16 in. U.H.)	1	1	1
17	W1278	Distance tube	1	1	1
18	W583	Grease retainer	1	1	1
19	W1475	Dust cover	1	1	1
20	W1478	Nut	1	1	1
21	W1024	Distance piece	1	1	1
22	W1112	Brake anchor plate	1	1	1
23	F1747	Nut	1	1	1
24	W1406	LEADING BRAKE SHOE c/w LINING	1	1	1
25	W1407	TRAILING BRAKE SHOE c/w LINING	1	1	1
26	NW243	Brake lining	2	2	2
27	W129	Brass rivet	16	16	16
28	W1415	Pivot pad	2	2	2
29	W135	Shoe return spring	2	2	2
30	W1083	Brake cam	1	1	1
31	W1487	Brake cam lever	1	1	1
32	S1–52	Nut	1	1	1
33	W1488	Lever return spring	1	1	1
34	~~W1134~~ 37-2099	Chain adjuster	2	2	2
35	W1015	Adjuster end plate	2	2	2
36	W1058	Self locking nut	2	2	2
37	F1747	Spindle nut	2	2	2
38	D106	Tyre security bolt	2	–	2
38	WM3	Tyre security bolt	–	2	–

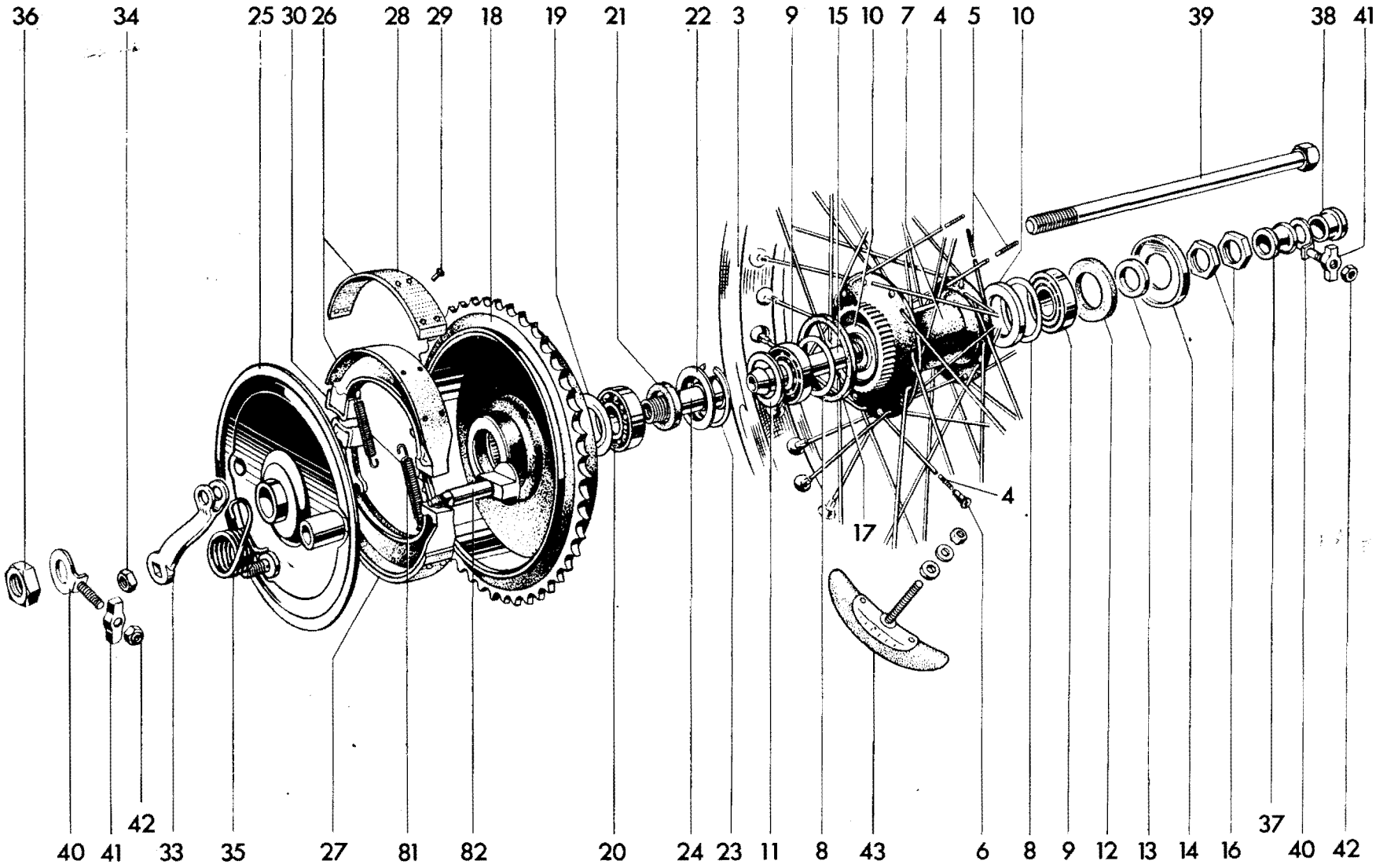

Fig. 21. QUICKLY DETACHABLE REAR WHEEL

Ref. No.	Part No.	DESCRIPTION	QUANTITY		
		QUICKLY DETACHABLE REAR WHEEL	6T	TR6	T120
1	W1310	Q.D. REAR WHEEL COMPLETE	1	1	1
2	W1009	RIM, SPOKES AND HUB ASSEMBLY	1	1	1
3	W1001	Rear wheel rim (WM3–18)	1	1	1
4	W1107	Spoke (8/10G x 7 9/16 in. 90°) c/w nipple	20	20	20
5	W1108	Spoke (8/10G x 7 7/8 in. 90°) c/w nipple	20	20	20
6	S79–2	Spoke nipple	40	40	40
7	W1100	Hub	1	1	1
8	W1033	Backing ring	2	2	2
9	W1034	Taper roller bearing complete	2	2	2
10	W1480	Grease retainer	2	2	2
11	W1035	Dust cap	1	1	1
12	W1036	Felt washer	1	1	1
13	W1037	Distance piece	1	1	1
14	W1038	Dust cap	1	1	1
15	W1039	Bearing sleeve	1	1	1
16	E398	Bearing adjuster nut	2	2	2
17	W1091	Rubber sealing ring	1	1	1
18	W1040	Sprocket and brake drum (46T)	1	1	1
19	W1143	Grease retainer	1	1	1
20	W1041	Bearing	1	1	1
21	W1042	Felt washer	1	1	1
22	W1043	Bearing and felt retainer	1	1	1
23	W1044	Circlip	1	1	1
24	W1045	Bearing sleeve	1	1	1
25	W1121	Brake anchor plate	1	1	1
26	W1406	LEADING BRAKE SHOE c/w LINING	1	1	1
27	W1407	TRAILING BRAKE SHOE c/w LINING	1	1	1
28	NW243	Brake lining	2	2	2
29	W129	Brass rivet	16	16	16
30	W1415	Pivot pad	2	2	2
31	W135	Shoe return spring	2	2	2
32	W1083	Brake cam	1	1	1
33	W1487	Brake cam lever	1	1	1
34	S1–52	Nut	1	1	1
35	W1488	Lever return spring	1	1	1
36	W1052	Nut	1	1	1
37	W1053	Inner distance piece	1	1	1
38	W1170	Outer distance piece	1	1	1
39	W1055	Spindle	1	1	1
40	W1135	Chain adjuster	2	2	2
41	W1015	Adjuster end plate	2	2	2
42	W1058	Self locking nut	2	2	2
43	WM3	Tyre security bolt	2	2	2

SPECIAL ORDER ONLY
90 DAYS ENG.

REAR WHEEL 27

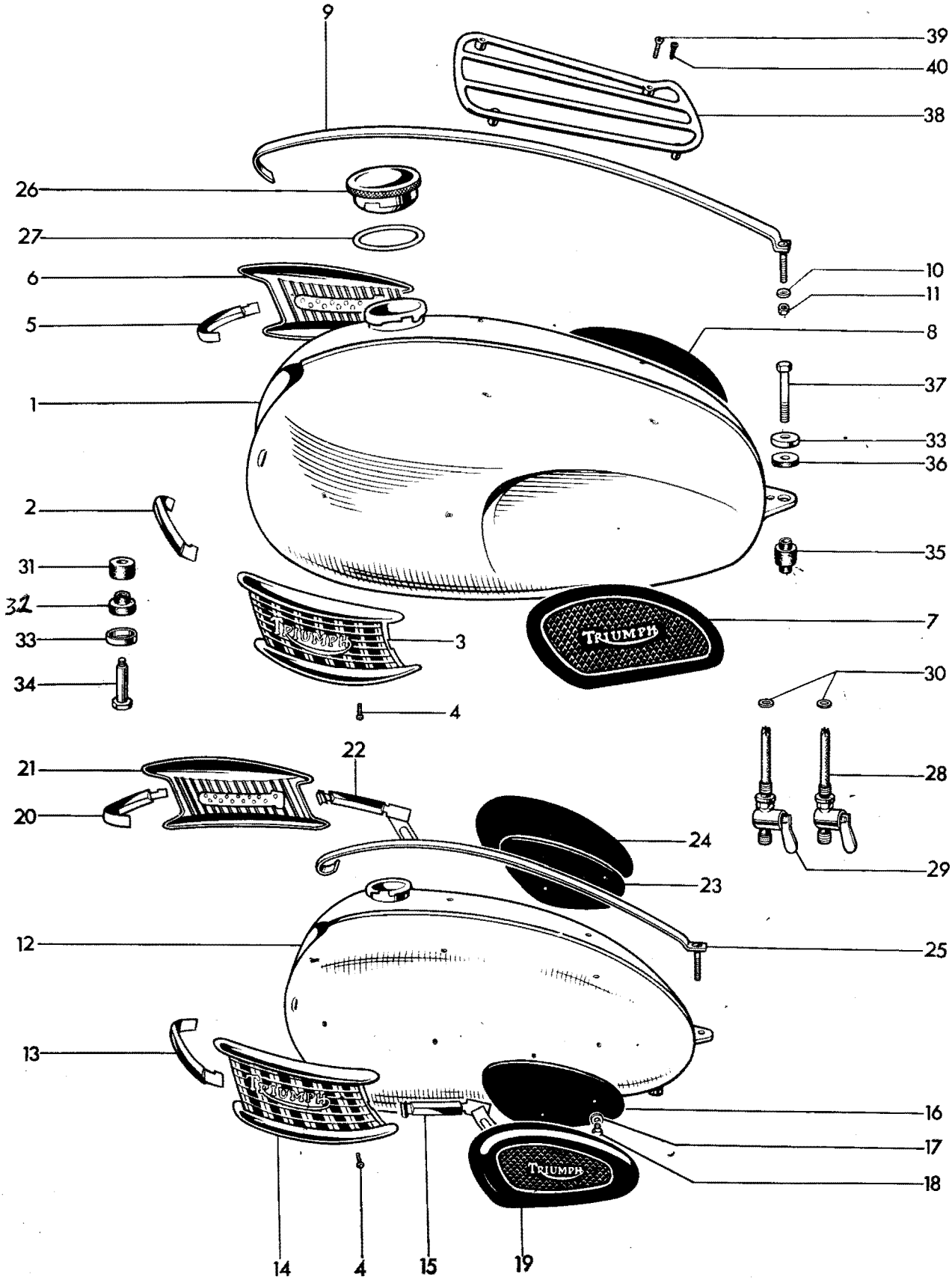

Fig. 22. PETROL TANKS

Ref. No.	Part No.	DESCRIPTION	QUANTITY		
		PETROL TANKS	6T	TR6	T120
1	F5260	Petrol tank (4 gallons)	1	1	1
2	F4148	Styling strip (left, front)	1	1	1
3	F4766	Styling unit (left)	1	1	1
4	F4129	Styling unit screw (0·435 in. U.H.)	4	4	4
5	F4151	Styling strip (right front)	1	1	1
6	F4767	Styling unit (right)	1	1	1
7	F5401	Left knee grip	1	1	1
8	F5402	Right knee grip	1	1	1
9	F5398	Centre styling strip	1	1	1
10	F4019	Serrated washer	1	1	1
11	H919	Nut	1	1	1
12	F5416	Petrol tank (3 gallons)	–	A	A
13	F4235	Styling strip (left, front)	–	A	A
14	F4127	Styling unit (left)	–	A	A
15	F4236	Styling strip (left, rear)	–	A	A
16	F3915	Knee grip plate (left)	–	A	A
17	S25–13	Plain washer	–	A	A
18	T361	Knee grip plate bolt ($\frac{1}{4}$ in. U.H.)	–	A	A
19	F1606	Knee grip (left)	–	A	A
20	F4237	Styling strip (right, front)	–	A	A
21	F4128	Styling unit (right)	–	A	A
22	F4238	Styling strip (right, rear)	–	A	A
23	F3916	Knee grip plate (right)	–	A	A
24	F1605	Knee grip (right)	–	A	A
25	F5564	Centre styling strip	–	A	A
26	F3220	FILLER CAP	1	1	1
27	F4048	Joint washer	1	1	1
28	F4971	Petrol tap (left)	1	1	1
29	F4972	Petrol tap with reserve tube	1	1	1
30	F1511	Fibre washer	2	2	2
31	F5228	Rubber washer	2	2	2
32	F5229	Spigot rubber	2	2	2
33	F3814	Cup	3	3	3
34	F1808	Bolt ($1\frac{3}{16}$ in. U.H.)	2	2	2
35	F5336	Double spigot rubber	1	1	1
36	F967	Rubber washer	1	1	1
37	F5337	Bolt ($1\frac{13}{32}$ in. U.H.)	1	1	1
38	F3917	Parcel grid	1	1	1
39	F2936	Screw	1	1	1
40	F4384	Rubber blanking plug	A	A	A

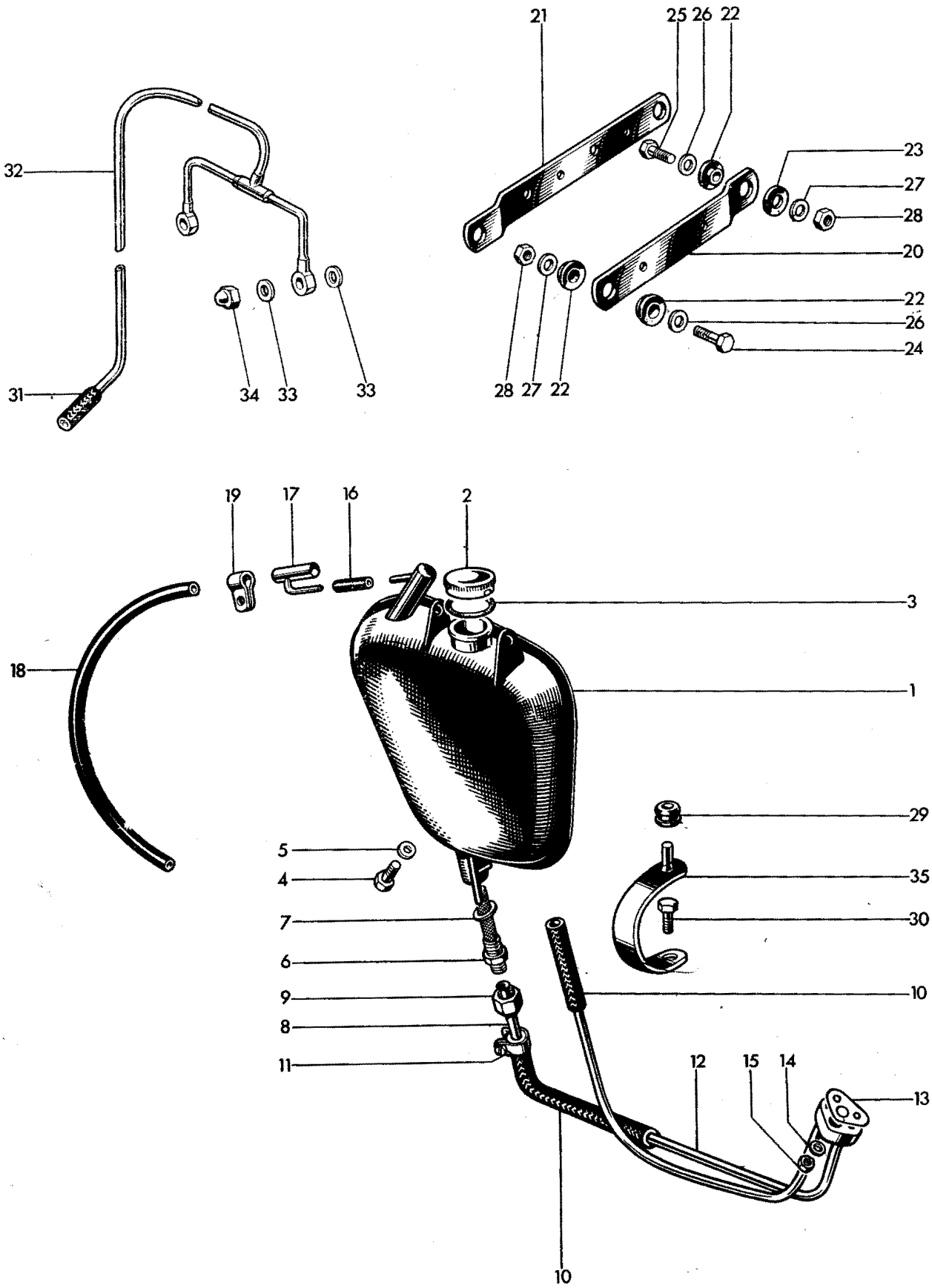

Fig. 23. OIL TANK

Ref. No.	Part No.	DESCRIPTION	QUANTITY		
		OIL TANK	6T	TR6	T120
1	F6038 ~~F6308~~	Oil tank	1	1	1
2	F3216	FILLER CAP	1	1	1
3	F4047	Joint washer	1	1	1
4	F5343	Drain plug	1	1	1
5	PT104B	Fibre washer	1	1	1
6	F3179	Oil tank filter	1	1	1
7	F1713	Fibre washer	1	1	1
8	F3655	Upper feed pipe	1	1	1
9	F3182	Union nut	1	1	1
10	E4594	Flexible connector	2	2	2
11	E5473	Clip	4	4	4
12	E4590	Oil pipes and junction block	1	1	1
13	E3763	Joint washer	1	1	1
14	E3446	Plain washer	1	1	1
15	E1310	Nut	1	1	1
16	E5374	Vent pipe	1	1	1
17	E5370	"T" piece	1	1	1
18	E5376	Extension pipe	1	1	1
19	F3098	Clip	2	2	2
20	F5949	Front strap	1	–	–
21	F5358	Rear Strap	1	–	–
20	F5328	Front strap	–	1	1
21	F5329	Rear strap	–	1	1
22	F5247	Spigot rubber	6	6	6
23	F5248	Rubber washer	2	2	2
24	F5330	Bolt ($\frac{3}{32}$ in. U.H.)	2	4	4
25	F5331	Bolt ($\frac{2}{32}$ in. U.H.)	2	–	
26	S25–2	Plain washer ($\frac{3}{8}$ in.)	4	4	4
27	S25–3	Plain washer ($\frac{5}{16}$ in.)	4	4	4
28	T224	Nut	4	4	4
29	F6039	Grommet	1	1	1
30	F929	Bolt ($\frac{1}{2}$ in. U.H.)	1	1	1
31	E3383	Rubber connector	1	1	1
32	E4159	Rocker oil feed pipe	1	1	1
33	E1335	Copper washer	4	4	4
34	E1435	Domed nut	2	2	2
35	F6147	Bracket	1	1	1

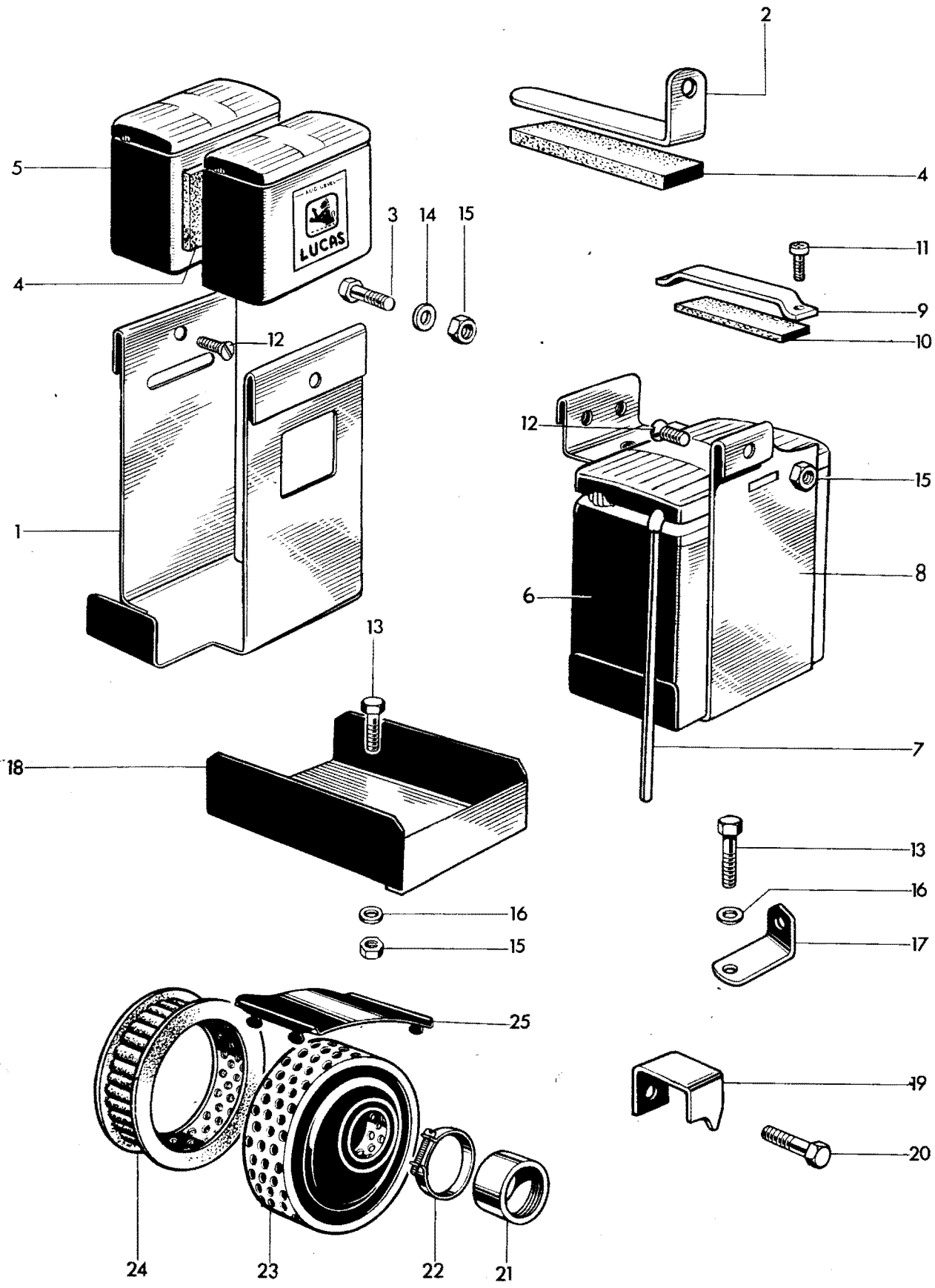

Fig. 24. BATTERY CARRIER AND AIR FILTER

BATTERY CARRIER AND AIR FILTER

Ref. No.	Part No.	DESCRIPTION	QUANTITY 6T	TR6	T120
1	F5948	Battery carrier	1	–	–
2	F6129	Retainer strap	1	–	–
3	F1369	Bolt ($\frac{5}{8}$ in. U.H.)	1	–	–
4	F3470	Rubber pad	3	–	–
5	MKZ9E	Battery	2	–	–
6	MLZ9E	Battery c/w lid	–	1	1
7	F4814	Plastic vent pipe	2	1	1
8	F5333	Battery carrier	–	1	1
9	F4661	Top strap	–	1	1
10	F4662	Packing rubber	–	1	1
11	E3200	Screw ($\frac{11}{16}$ in. U.H.)	–	1	1
12	E3728	Screw ($\frac{15}{32}$ in. U.H.)	2	1	1
13	DS57	Bolt ($\frac{7}{16}$ in. U.H.)	3	3	3
14	S25–1	Plain washer	2	1	1
15	F879	Nut	6	5	5
16	S25–13	Plain washer	3	2	2
17	F4283	Rectifier bracket	1	1	1
18	F5665	Tool tray	1	1	1
19	F5414	Inflator bracket	1	1	1
20	F1369	Bolt ($\frac{5}{8}$ in. U.H.)	1	1	1
21	F4576	Adaptor sleeve	1	–	–
22	F5625	Clip	1	–	–
23	F5334	AIR FILTER	1	–	–
24	F4811	Filter element (felt)	1	–	–
21	F5958	Adaptor sleeve	–	1	–
22	F6074	Clip	–	1	–
23	F5956	AIR FILTER	–	1	–
24	F5764	Filter element (coarse felt)	–	1	–
25	F4964	Water deflector	–	1	–

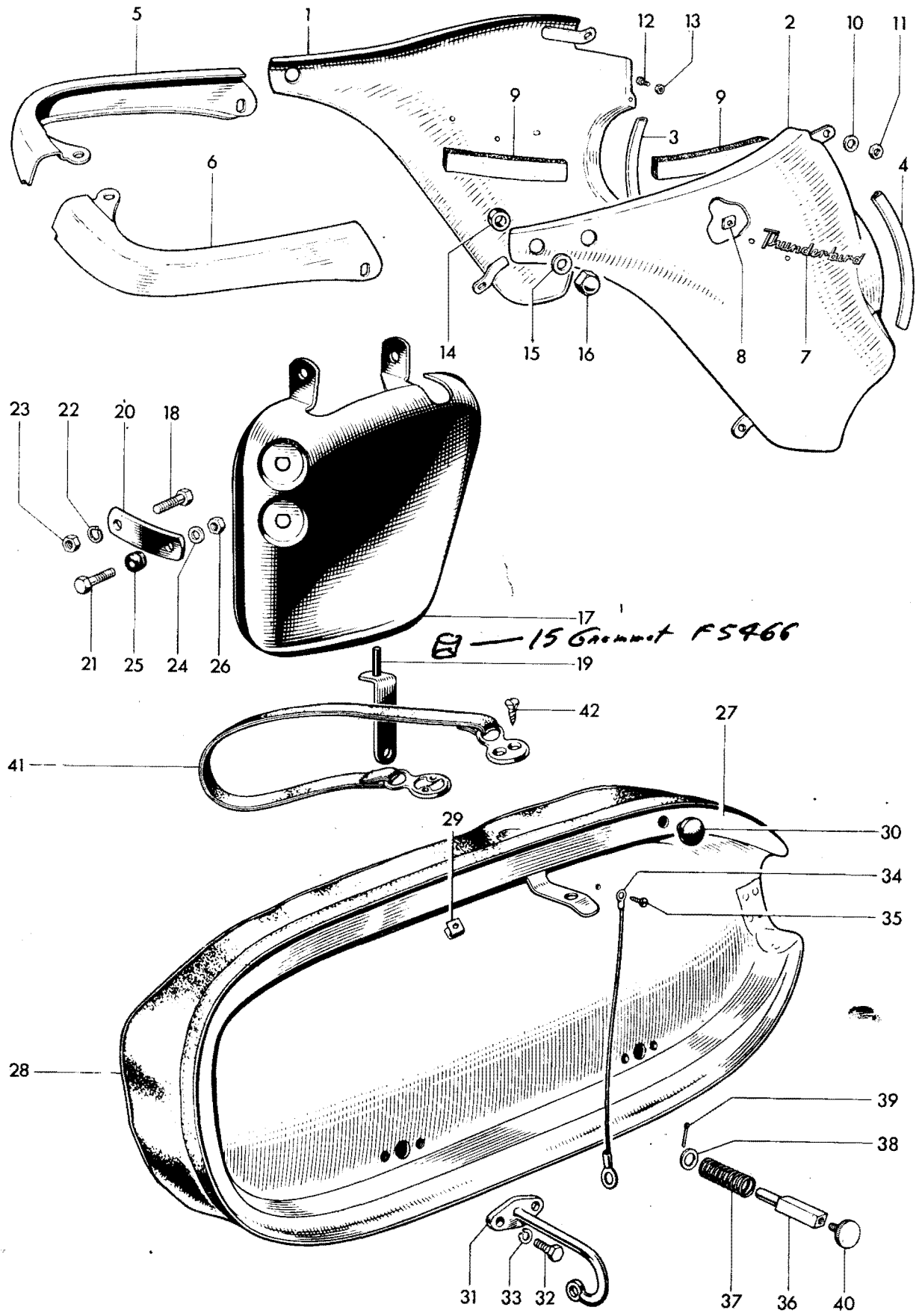

Fig. 25. **PANELS AND TWINSEAT**

Ref. No.	Part No.	DESCRIPTION	QUANTITY		
		PANELS AND TWINSEAT	6T	TR6	T120
1	F5319	Left panel	1	–	–
2	F5320	Right panel	1	–	–
3	F6104	Left beading	1	–	–
4	F6105	Right beading	1	–	–
5	F5323	Left valance	1	–	–
6	F5324	Right valance	1	–	–
7	F6195	Motif "Thunderbird"	2	–	–
8	F4317	Spire nut	4	–	–
9	F5538	Rubber pad	2	–	–
10	S25–2	Plain washer	2	–	–
11	S1–52	Nut	2	–	–
12	F4715	Screw ($\frac{13}{32}$ in. U.H.)	2	–	–
13	F4717	Self locking nut	2	–	–
14	F2694	Distance piece	3	–	–
15	GS308	Plain washer	4	–	–
16	E4329	Domed nut	4	–	–
17	F5394	Switch panel	–	1	1
18	F1369	Bolt ($\frac{5}{8}$ in. U.H.)	–	1	1
19	F5939	Fixing bracket	–	1	1
20	F5923	Link	–	1	1
21	F1756	Bolt ($\frac{3}{4}$ in. U.H.)	–	1	1
22	S26–2	Spring washer	–	2	2
23	F879	Nut	–	2	2
24	S25–43	Washer	–	1	1
25	F5466	Grommet	–	2	2
26	E3290	Self locking nut	–	1	1
27	F5366	TWINSEAT	1	1	1
28	F5418	Twinseat cover c/w clips	1	1	1
29	F4475	Clip		as required	
30	F4898	Rubber buffer	2	2	2
31	F4222	Hinge	2	2	2
32	DS57	Bolt ($\frac{7}{16}$ in. U.H.)	4	4	4
33	S26–2	Spring washer	4	4	4
34	D374	Check wire	1	1	1
35	F4483	Self tapping screw	1	1	1
36	F4226	Seat catch plunger	1	1	1
37	F4228	Spring	1	1	1
38	E1719A	Plain washer	1	1	1
39	$\frac{3}{32}$ in. x $\frac{1}{2}$ in.	Split pin	1	1	1
40	F4227	Knob	1	1	1
41	F4361	Safety strap		as required	
42	F4365	Self tapping screw	4	4	4

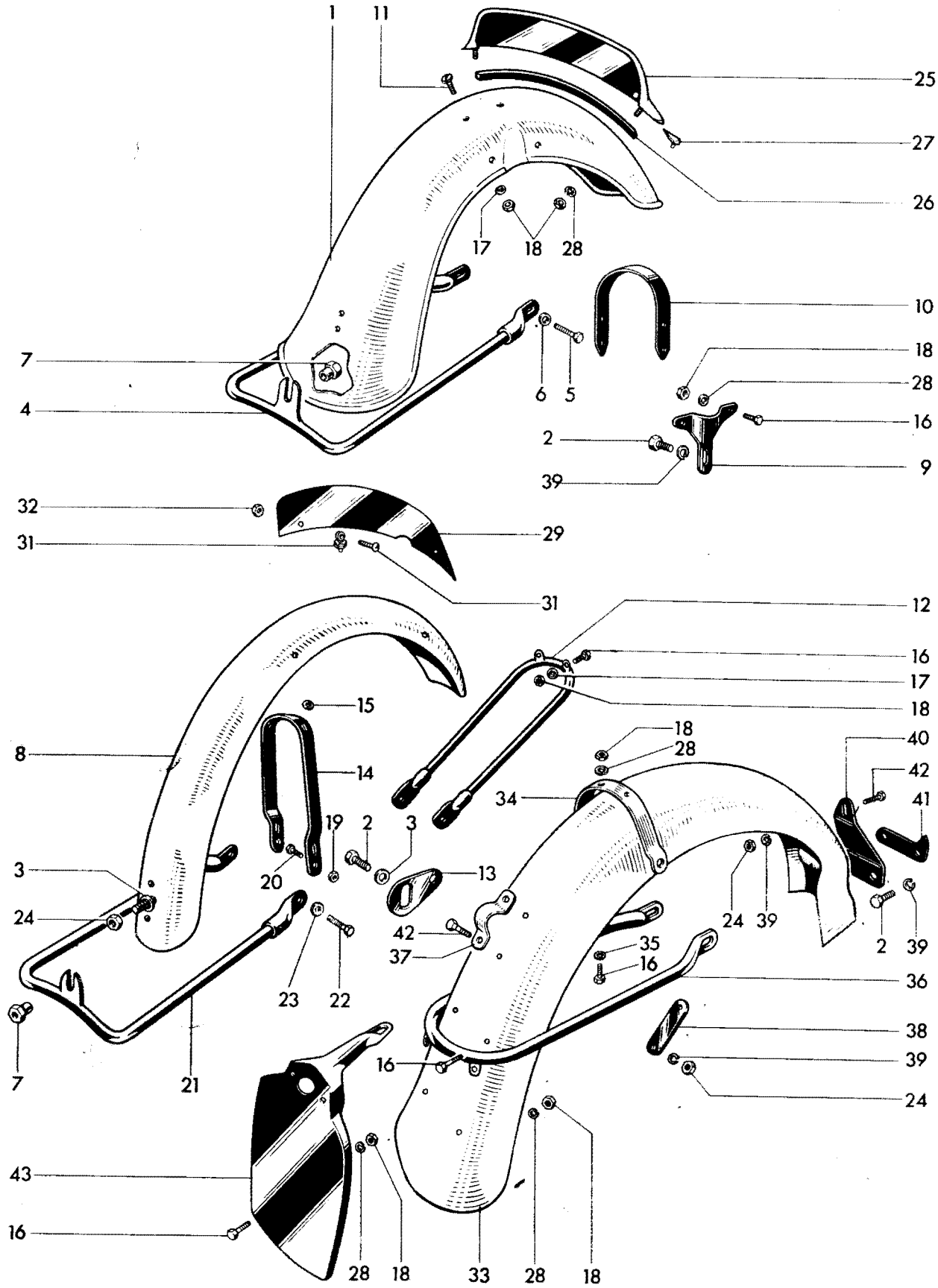

Fig. 26. MUDGUARDS

MUDGUARDS

Ref. No.	Part No.	DESCRIPTION	QUANTITY		
			6T	TR6	T120
1	H1689	Front mudguard	1	–	–
2	F929	Bolt ($\frac{1}{2}$ in. U.H.)	4	4	4
3	F4299	Plain washer	4	5	5
4	H1100	Bottom stay	1	–	–
5	W62	Bolt ($\frac{11}{16}$ in. U.H.)	2	–	–
6	S25–2	Plain washer	2	–	–
7	NS362	Spigot nut	1	1	1
8	H1675	Mudguard blade	–	1	1
9	H1540	Bracket	2	–	–
10	H1538	Mudguard bridge	2	–	–
11	F5001	Bolt ($\frac{9}{16}$ in. U.H.)	5	–	–
12	H1681	Front stay	–	1	1
13	H1685	Bracket	–	2	2
14	H1683	Mudguard bridge	–	1	1
15	WE170	Fibre washer	–	2	2
16	DS57	Bolt ($\frac{7}{16}$ in. U.H.)	10	10	10
17	S25–1	Plain washer	6	5	5
18	F879	Nut	17	10	10
19	T224	Nut	–	2	2
20	DS55	Bolt ($\frac{15}{16}$ in. U.H.)	–	2	2
21	H1482	Bottom stay	–	1	1
22	H424	Bolt ($\frac{39}{64}$ in. U.H.)	–	2	2
23	S25–71	Plain washer	–	2	2
24	S1–51	Nut	3	4	4
25	F2698	Number plate	1	–	–
26	H251	Plastic beading	1	–	–
27	F4332	Packing piece	1	–	–
28	S26–2	Spring washer	10	4	4
29	F2996	Number plate	–	1	1
30	H741	Clip assembly	–	2	2
31	H687	Screw ($\frac{3}{8}$ in. U.H.)	–	2	2
32	H745	Nut	–	2	2
33	F5953	Mudguard blade	1	–	–
33	F5984	Mudguard blade	–	1	1
34	F4860	Mudguard bridge	1	1	1
35	F4299	Plain washer	2	2	2
36	F5424	Lifting handle	1	1	1
37	F5994	Clip	1	1	1
38	F6031	Backing plate	1	1	1
39	S26–3	Spring washer	7	5	5
40	F5369	Bracket	1	1	1
41	F5415	Inflator bracket	1	1	1
42	H590	Bolt ($\frac{9}{16}$ in. U.H.)	3	3	3
43	F5924	Number plate	1	1	1

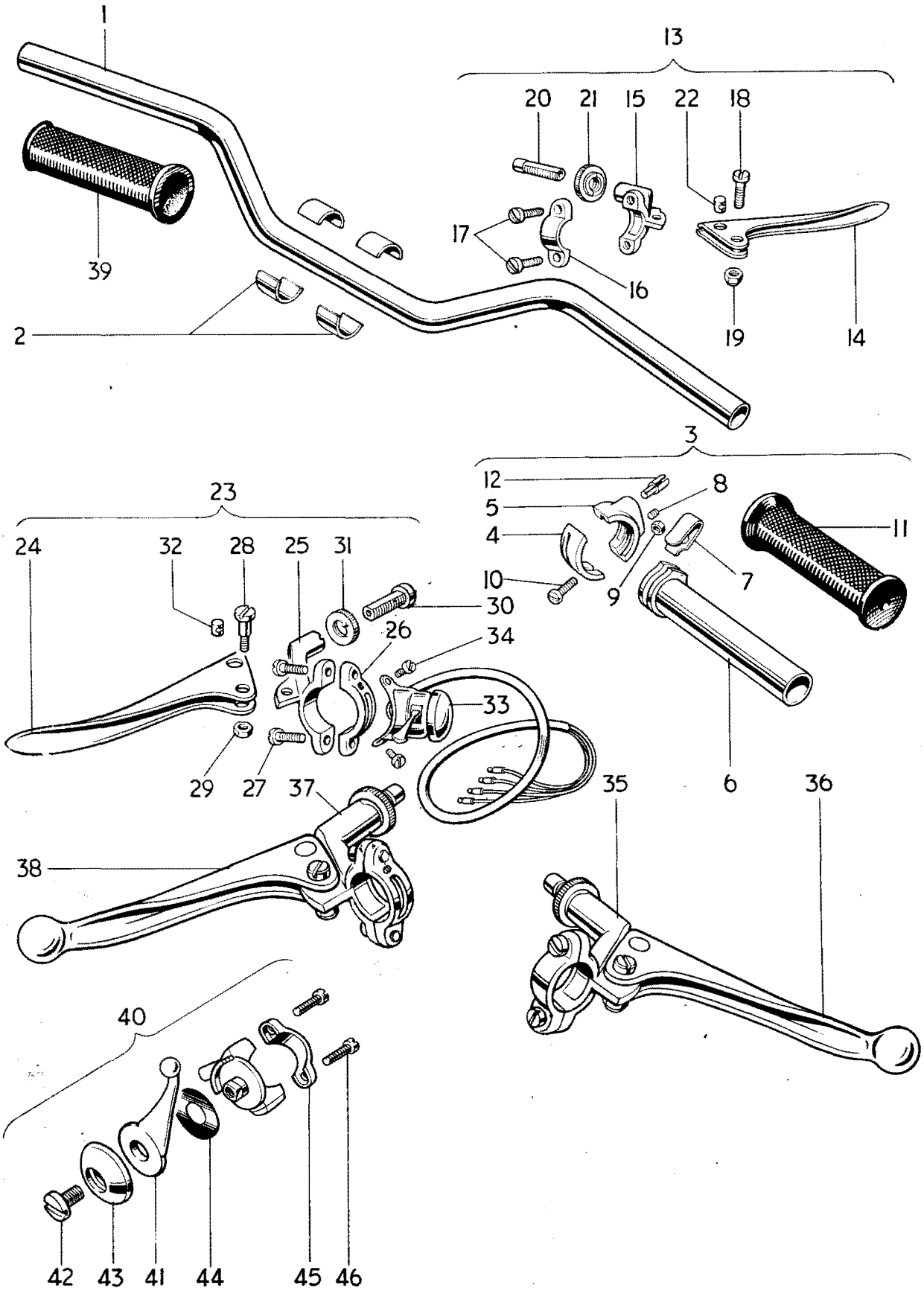

Fig. 27. HANDLEBARS AND CONTROL LEVERS

HANDLEBARS AND CONTROL LEVERS

Ref. No.	Part No.	DESCRIPTION	QUANTITY 6T	TR6	T120
1	H1484	Handlebar	1	1	1
2	H1425	Packing piece	4	4	4
3	16/417	TWISTGRIP	1	1	1
4	16/328	Body top half	1	1	1
5	16/329	Body bottom half	1	1	1
6	16/091	Rotor	1	1	1
7	16/008	Friction spring	1	1	1
8	16/009	Friction spring screw	1	1	1
9	16/010	Locknut	1	1	1
10	11/013	Screw	2	2	2
11	16/070	Grip	1	1	1
12	16/011	Cable stop	1	1	1
13	18/995	FRONT BRAKE LEVER ASSEMBLY	1	–	1
14	18/535	Brake lever	1	–	1
15	18/912	Brake lever bracket	1	1	1
16	12/040	Clamp	1	1	1
17	11/014	Screw	2	2	2
18	18/087	Fulcrum screw	1	1	1
19	18/053	Self locking nut	1	1	1
20	18/838	Cable adjuster	1	1	1
21	18/839	Thumb nut	1	1	1
22	18/880	Barrel nipple	1	1	1
23	18/996	CLUTCH LEVER ASSEMBLY	1	–	1
24	18/528	Clutch lever	1	–	1
25	18/913	Clutch lever bracket	1	1	1
26	18/910	Clamp (H668A)	1	1	1
27	61/004	Screw	2	2	2
28	18/087	Fulcrum screw	1	1	1
29	18/053	Self locking nut	1	1	1
30	18/838	Cable adjuster	1	1	1
31	18/839	Thumb nut	1	1	1
32	18/880	Barrel nipple	1	1	1
33	31563	Horn push and dip switch	1	1	1
34	H689	Screw ($\frac{1}{4}$ in. U.H.)	2	2	2
35	18/935	FRONT BRAKE LEVER ASSEMBLY (Ball-end)	–	1	–
36	18/754	Brake lever (Ball-end)	–	1	–
37	18/993	CLUTCH LEVER ASSEMBLY (Ball-end)	–	1	–
38	18/752	Clutch lever (Ball-end)	–	1	–
39	16/069	Handlebar grip	1	1	1
40	12/608	AIR LEVER	1	1	–
41	12/556	Lever	1	1	–
42	12/607	Bolt	1	1	–
43	12/606	Cap	1	1	–
44	12/033	Spring washer	1	1	–
45	12/040	Clamp	1	1	–
46	11/014	Screw	2	2	–

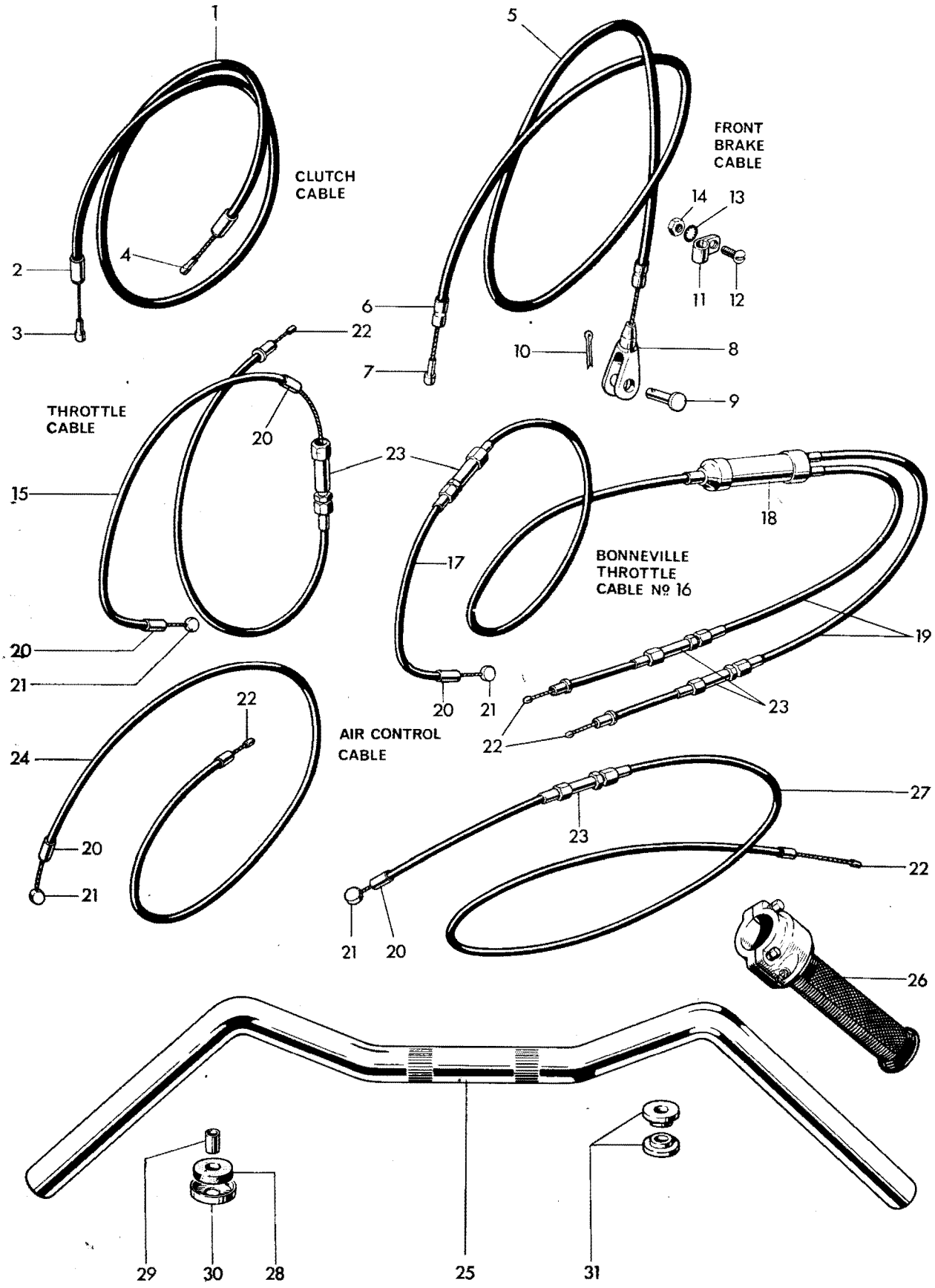

Fig. 28. CONTROL CABLES AND AMERICAN HANDLEBARS

CONTROL CABLES AND AMERICAN HANDLEBARS

Ref. No.	Part No.	DESCRIPTION	QUANTITY 6T	TR6	T120
1	D466	CLUTCH CABLE	1	1	1
2	D103	Ferrule	2	2	2
3	D368	Nipple	1	1	1
4	DS73	Nipple	1	1	1
5	D416	FRONT BRAKE CABLE	1	1	1
6	D103	Ferrule	2	2	2
7	D368	Nipple	1	1	1
8	W593	Fork end	1	1	1
9	WF32	Pivot pin	1	1	1
10	$\frac{1}{16}$ in. x $\frac{5}{8}$ in.	Split pin	1	1	1
11	H1171	Clip	1	–	–
12	F4715	Screw ($\frac{13}{32}$ in. U.H.)	1	–	–
13	GS299	Serrated washer	1	–	–
14	H745	Nut	1	–	–
15	D495	THROTTLE CABLE	1	–	–
15	D519	THROTTLE CABLE use D495	–	1	–
16	D499	THROTTLE CABLE	–	–	1
17	D500	Twistgrip cable	–	–	1
18	244/104	Junction block	–	–	1
19	D423	Carburetter cable	–	–	2
20	D101	Ferrule	3	3	10
21	D83	Nipple	1	1	1
22	NS191	Nipple	1	1	5
23	D104	Adjuster	1	1	3
24	D435	Air control cable	1	–	–
24	D507	Air control cable	–	1	–
25	H1694	American handlebar	1	–	–
25	H1511	American handlebar	–	1	1
5	D417	Front brake cable	1	1	1
16	D515	Throttle cable	–	–	1
26	313/6	Twin rotor twistgrip	–	–	1
27	D528	Throttle cable	–	–	2
28	H1580	Steady rubber	2	2	2
29	H1581	Distance piece	2	2	2
30	F3814	Cup	2	2	2
31	H1616	Solid bush (for handlebar-mounted windscreen)	4	4	4

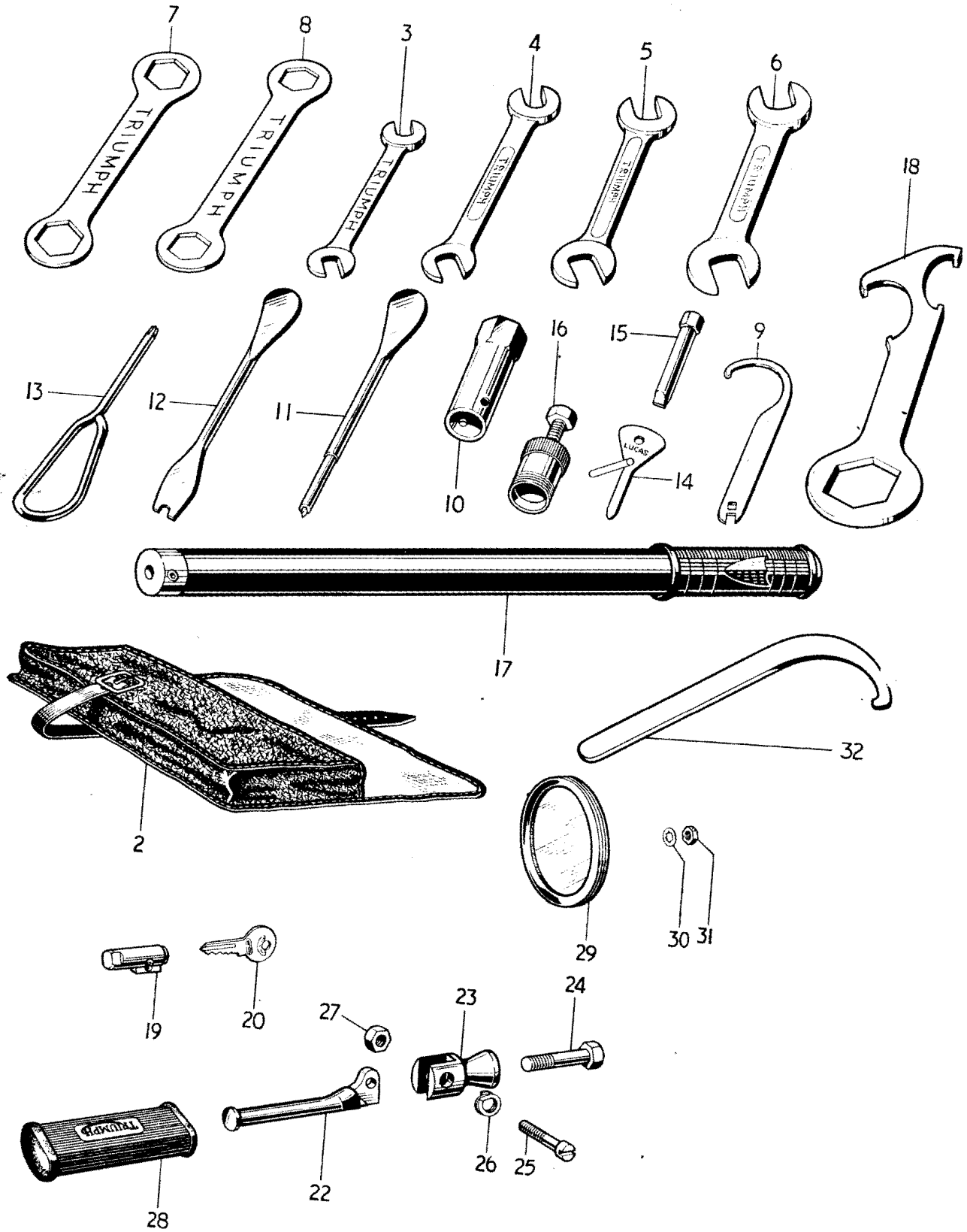

Fig. 29. TOOLKIT, FRAME LOCK, PILLION FOOTRESTS AND LICENCE HOLDER

TOOLKIT, FRAME LOCK, PILLION FOOTRESTS AND LICENCE HOLDER

Ref. No.	Part No.	DESCRIPTION	QUANTITY 6T	TR6	T120
1	D365	TOOLKIT COMPLETE	1	1	1
2	WA58	Tool roll	1	1	1
3	D360	Open spanner, $\frac{1}{8}$ x $\frac{5}{32}$ in. Whit.	1	1	1
4	D361	Open spanner, $\frac{3}{16}$ x $\frac{1}{4}$ in. Whit.	1	1	1
5	NA55	Open spanner, $\frac{1}{4}$ x $\frac{5}{16}$ in. Whit.	1	1	1
6	DA16	Open spanner, $\frac{3}{8}$ x $\frac{7}{16}$ in. Whit.	1	1	1
7	PA57	Ring spanner, $\frac{1}{2}$ x $\frac{9}{16}$ in. Whit.	1	1	1
8	D311	Ring spanner, $\frac{5}{8}$ x $\frac{11}{16}$ in. Whit.	1	1	1
9	D362	"C" spanner and tappet key	1	1	1
10	D87	Plug spanner	1	1	1
11	D363	Tyre lever and screwdriver	1	1	1
12	D364	Tyre lever and clutch key	1	1	1
13	D336	Phillips No. 3 screwdriver	1	1	1
14	400935	Screwdriver	1	1	1
15	D496	Screwdriver for chain tensioner	1	1	1
16	DA50/1	Clutch hub extractor	A	A	A
17	D296	Tyre inflator	1	1	1
18	D220	Fork spanner (for cap nut)	A	A	A
19	D402/3	FRAME LOCK c/w KEYS	1	1	1
20	D403	Key (state number)	1	1	1
21	F5552	PILLION FOOTREST	2	2	2
22	F1694	Pedal	2	2	2
23	F2268	Hanger	2	2	2
24	F5535	Bolt ($\frac{13}{16}$ in. U.H.)	2	2	2
25	F2271	Pivot bolt	2	2	2
26	F2277	Thackeray (spring) washer	2	2	2
27	S1–51	Nut	2	2	2
28	F1695	Pedal rubber	2	2	2
29	D261	Licence holder	1	1	1
30	E1612	Serrated washer	1	–	–
31	F879	Nut	1	–	–
32	D527	Fork spanner (for sleeve nut)	A	A	A

CARBURETTER COMPLETE
REF. Nº1

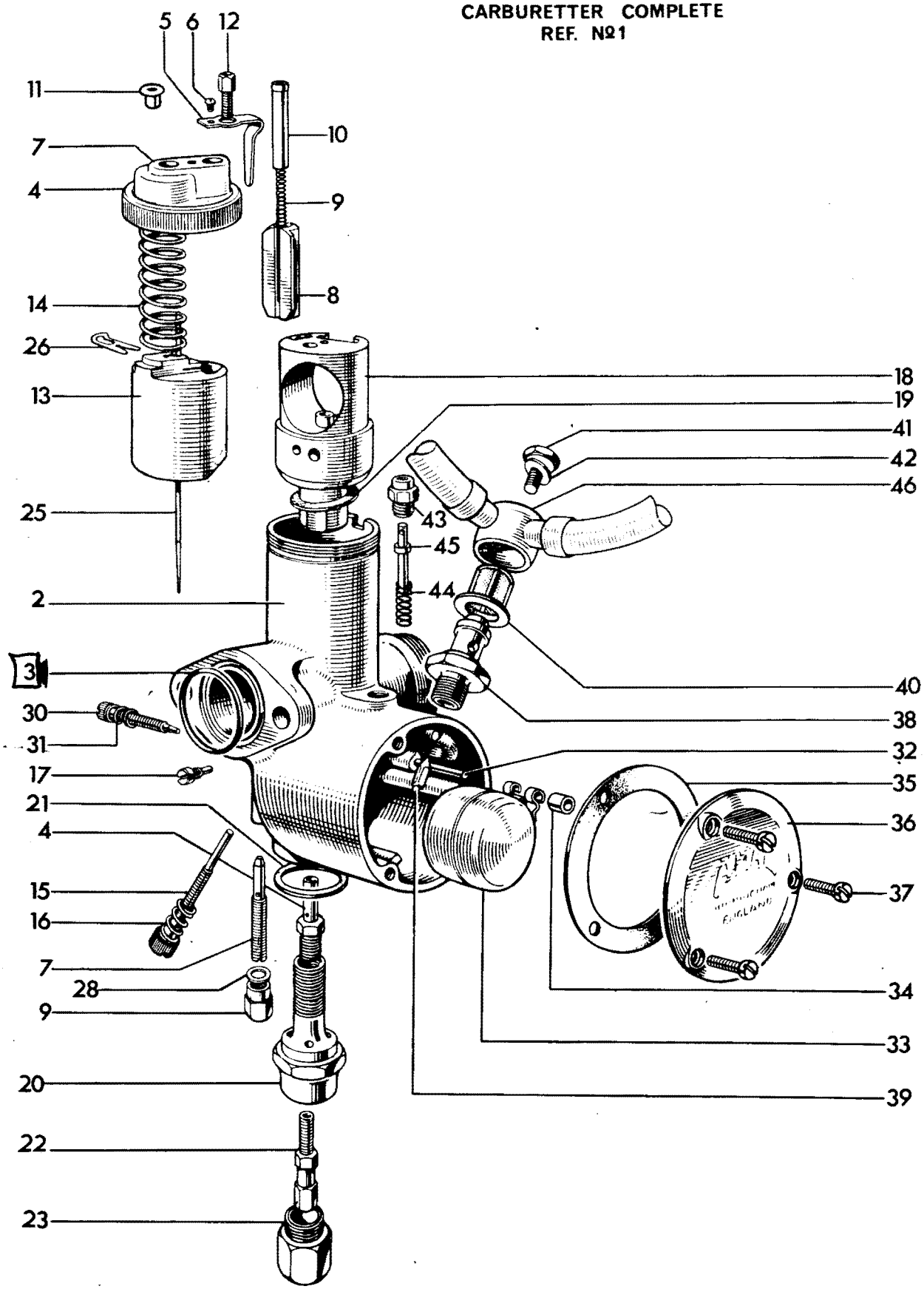

Fig. 30. AMAL CARBURETTER, 6T

Ref. No.	Part No.	DESCRIPTION	QUANTITY

AMAL CARBURETTER 6T

			6T
1	376/303	CARBURETTER	1
2	376/003	Mixing chamber, $1\frac{1}{16}$ in. choke	1
3	244/1048	"O" ring seal	1
4	376/065	Mixing chamber cap	1
5	29/307	Spring	1
6	4/241	Screw	1
7	376/107	Mixing chamber top	1
8	376/062	Air valve	1
9	4/046	Spring	1
10	6/047	Air valve guide	1
11	6/132A	Throttle cable ferrule	1
12	4/035	Air cable adaptor	1
13	376/060	Throttle valve (state cutaway)	1
14	376/061	Throttle return spring	1
15	376/068	Throttle stop screw	1
16	376/069	Stop screw spring	1
17	376/070	Peg screw	1
18	376/057	Jet block ($1\frac{1}{16}$ in. choke)	1
19	376/067	Joint washer	1
20	376/073	Jet holder	1
21	376/074	Fibre washer	1
22	376/100	Main jet (state size)	1
23	376/075	Cover nut	1
24	376/072	Needle jet (0.106)	1
25	376/063	Needle (Type C)	1
26	4/230	Needle clip	1
27	376/076	Pilot jet (state size)	1
28	116/017	Fibre washer	1
29	376/095	Cover nut	1
30	332/017	Air adjusting screw	1
31	4/148	Spring	1
32	376/085	Float spindle	1
33	376/083	Float	1
34	376/094	Bush	1
35	376/078	Joint washer	1
36	376/077	Cover	1
37	376/079	Screw	3
38	376/088	Needle seating	1
39	376/089	Needle	1
40	376/093	Filter	1
41	376/091	Bolt	1
42	376/092	Fibre washer	1
43	376/086	Tickler	1
44	376/087	Tickler spring	1
45	343/011	Tickler body	1
46	F5339	Petrol pipe	1

CARBURETTER COMPLETE
REFERENCE Nº1

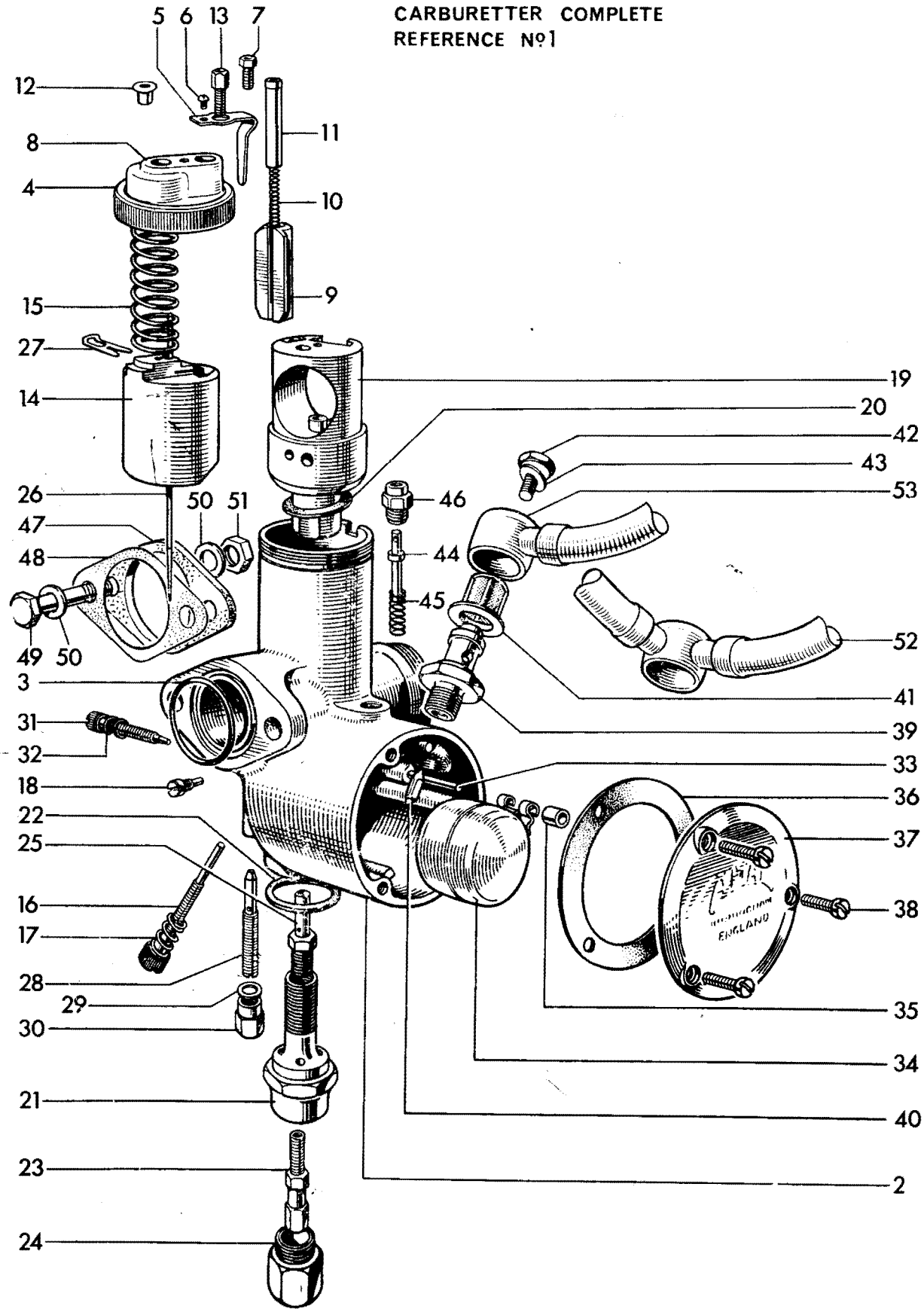

Fig. 31. AMAL CARBURETTER, TR6 AND T120

Ref. No.	Part No.	DESCRIPTION	QUANTITY	
		AMAL CARBURETTER, TR6 & T120	TR6	T120
1	389/97	CARBURETTER	1	–
1	389/203	CARBURETTER	–	2
2	389/002	Mixing chamber (1⅛ in. choke)	1	2
3	244/1048	"O" ring seal	1	2
4	389/065	Mixing chamber cap	1	2
5	29/307	Spring	1	2
6	4/241	Screw	1	2
7	4/137A	Plug screw	–	2
8	389/107	Mixing chamber top	1	2
9	389/062	Air valve	1	–
10	4/046	Spring	1	–
11	29/057	Air valve guide	1	–
12	6/132A	Throttle cable ferrule	1	2
13	4/035	Air cable adjuster	1	–
14	389/060	Throttle valve (state cutaway)	1	2
15	389/061	Throttle return spring	1	2
16	376/068	Throttle stop screw	1	2
17	376/069	Stop screw spring	1	2
18	376/070	Peg screw	1	2
19	389/056	Jet block (1⅛ in. choke)	1	2
20	376/067	Joint washer	1	2
21	376/073	Jet holder	1	2
22	376/074	Fibre washer	1	2
23	376/100	Main jet (state size)	1	2
24	376/075	Cover nut	1	2
25	376/072	Needle jet (0.106)	1	2
26	389/063	Needle (Type D)	1	2
27	4/230	Needle clip	1	2
28	376/076	Pilot jet (state size)	1	2
29	116/162	Fibre washer	1	2
30	376/095	Cover nut	1	2
31	332/017	Air adjusting screw	1	2
32	4/148	Spring	1	2
33	376/085	Float spindle	1	2
34	376/083	Float	1	2
35	376/094	Bush	1	2
36	376/078	Joint washer	1	2
37	376/077	Cover	1	2
38	376/079	Screw	3	–
38	376/151	Screw	–	6
39	376/088	Needle seating	1	2
40	376/089	Needle	1	2
41	376/093	Filter	1	2
42	376/091	Bolt	1	2
43	376/092	Fibre washer	1	2
44	376/086	Tickler	1	2
45	376/087	Tickler spring	1	2
46	343/011	Tickler body	1	2
47	E2968	Insulating block	–	2
48	NA43A	Joint washer	–	2
49	F2603	Bolt (5/16 in. U.H.)	–	2
50	S25–3	Plain washer	–	4
51	T224	Nut	–	4
52	F5339	Petrol pipe	1	–
53	F5462	Petrol pipe	–	1

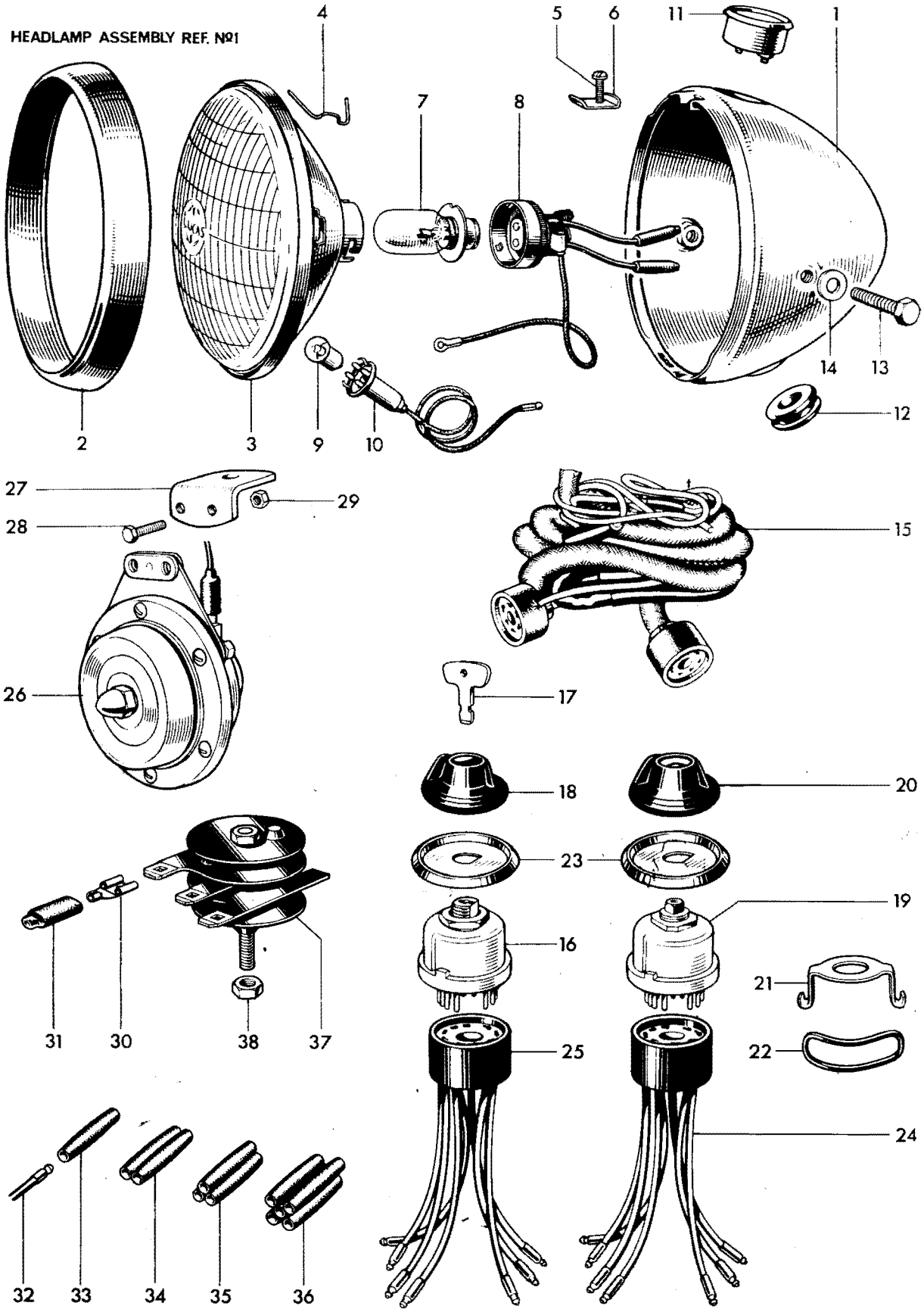

Fig. 32. HEADLAMP, WIRING HARNESS, HORN AND RECTIFIER

HEADLAMP, WIRING HARNESS, HORN AND RECTIFIER

Ref. No.	Part No.	DESCRIPTION	QUANTITY		
			6T	TR6	T120
1	58934	HEADLAMP COMPLETE	–	1	1
2	553248	Rim	–	1	1
3	516798	Light unit	–	1	1
4	504665	Fixing wire	–	6	6
5	144921	Screw	–	1	1
6	534296	Plate	–	1	1
7	312	Bulb (30/24 W. Vert dip. Pre-focus)	–	1	1
8	554602	Main bulbholder	–	1	1
9	988	Bulb (3W. M.C.C.)	–	1	1
10	554710	Pilot bulbholder	–	1	1
11	36296	Ammeter, type 2AR	–	1	1
12	862217	Grommet	–	1	1
13	112201	Bolt	–	2	2
14	137499	Plain washer	–	2	2
15	54933182	Wiring harness	–	1	1
16	34427	IGNITION SWITCH COMPLETE WITH KEY, type 88SA	–	1	1
17	54336176	Ignition key	–	1	1
18	54336178	Ignition switch cover	–	1	1
19	34289	Lighting switch, type 88SA	–	1	1
20	54330934	Knob c/w screw	–	1	1
21	F5983	Bracket	–	2	2
22	F5988	Rubber band	–	2	2
23	54330576	Switch bezel plate	–	2	2
24	54930007	Replacement harness socket (Lighting)	–	1	1
25	54930008	Replacement harness socket (ignition)	–	1	1
26	70163	Horn, type 8H	–	1	1
27	F5086	Bracket	–	1	1
28	T1076	Screw ($\frac{3}{8}$ in. U.H.)	–	2	2
29	F3799	Nut	–	2	2
30	54942078	Lucar connector	5	5	5
31	54190042	Insulating cover	5	5	5
32	900269	Snap connector terminal		as required	
33	900288	Single snap connector		as required	
34	850641	Double snap connector		as required	
35	850844	Triple snap connector		as required	
36	850832	Quintuple snap connector		as required	
37	49072	Rectifier, type 2DS 506	1	1	1
38	F5338	Nut (156 596)	1	1	1

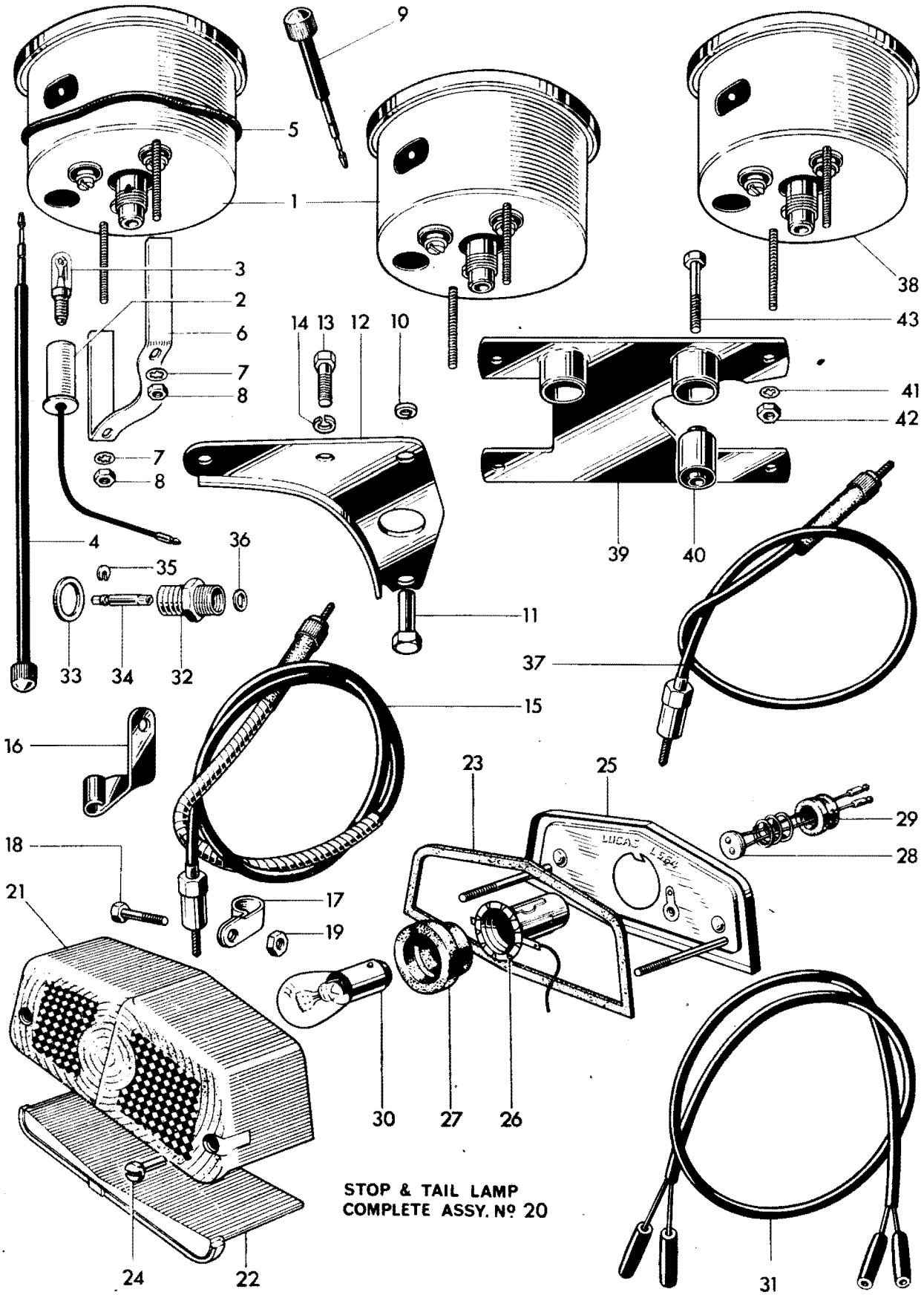

Fig. 33. SPEEDOMETER TACHOMETER AND TAIL LAMP

Ref. No.	Part No.	DESCRIPTION	QUANTITY		
		SPEEDOMETER, TACHOMETER AND TAIL LAMP	6T	TR6	T120
1	SSM5002/00	Speedometer head MPH	1	–	–
1	SSM5002/01	Speedometer head KPH	A	–	–
1	SSM5001/00	Speedometer head MPH	–	1	1
1	SSM5001/01	Speedometer head KPH	–	A	A
2	554734	Bulb holder	1	1	1
3	987	Bulb, 3.W. M.E.S.	1	–	–
3	990	Bulb, 3.W. M.E.S.	–	1	1
4	41–118–127–72	Trip control	1	–	–
5	31–753–778	Rubber ring	1	–	–
6	31–674–188–01	Fixing strap	1	–	–
7	30–283–014–11	Washer	2	–	–
8	30–277–023–11	Nut	2	–	–
9	41–148–203–10	Trip control	–	1	1
10	H1702	Distance piece	–	2	2
11	H1701	Sleeve nut	–	2	2
12	H1668	Bracket	–	1	1
13	DS57	Bolt ($\frac{7}{16}$ in. U.H.)	–	2	2
14	S26–2	Spring washer	–	2	2
15	D542	Speedometer cable (44 ins. long)	1	–	–
15	D543	Speedometer cable (40$\frac{1}{2}$ ins. long)	–	1	1
16	H1698	Cable bracket	1	–	–
17	F3098	Clip	1	1	1
18	F1718	Bolt (1$\frac{9}{16}$ in. U.H.)	1	1	1
19	S1–51	Nut	1	1	1
20	53454	STOP AND TAIL LAMP (type 564)	1	–	–
20	53432	STOP AND TAIL LAMP (type 564)	–	1	1
21	573839	Lens	1	1	1
22	575200	Window	1	1	1
23	575208	Lens seating gasket	1	1	1
24	575219	Sleeve nut	2	2	2
25	~~576002~~ 575358?	Base assembly	1	1	1
26	575209	Bulb holder	1	1	1
27	575207	Grommet	1	1	1
28	573828	Contact assembly	1	1	1
29	573825	Grommet	1	1	1
30	380	Bulb (6/21W. Offset pin)	1	–	–
30	384	Bulb (6/18W. Offset pin)	–	1	1
31	838604	Stop and tail lamp lead	1	1	1
32	~~E4699~~ E5607	Adaptor	–	1	1
33	T1257	Fibre washer	–	1	1
34	D493	Spade	–	1	1
35	D494	Circlip	–	1	1
36	E4803	"O" ring	–	1	1
37	D529	Tachometer cable (34$\frac{1}{2}$ in. long)	–	1	1
38	RSM 3001/02	Tachometer	–	1	1
39	H1596	MOUNTING BRACKET	–	1	1
40	H1087	Metalastik bush	–	2	2
41	30–282–014–11	Washer	–	4	4
42	30–276–037–11	Nut	–	4	4
43	H1086	Bolt (1$\frac{3}{16}$ in. U.H.)	–	2	2

Ref. 873/64 Published Feb. 1964

SUPPLEMENT TO

TRIUMPH

REPLACEMENT PARTS CATALOGUE

No. 2

650 c.c. MOTORCYCLES

SUPPLIED TO THE UNITED STATES

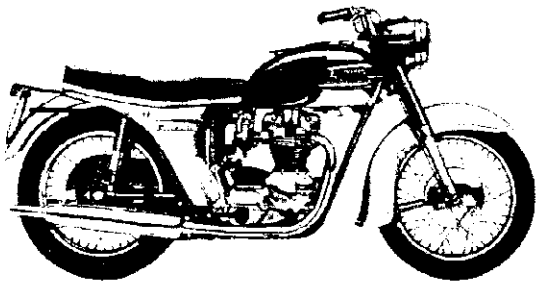

"B" RANGE AMERICAN FITMENTS 1964

Motorcycles supplied to the Eastern and Western coasts of the United States differ in some fitments from those listed in the Replacement Parts Catalogue, and in some fitments between the two coasts. The following is a list of the differences:—

The West Coast T120C is known as the TT Special on the East Coast.

Eastern States:—
The Triumph Corporation,
Towson,
Baltimore 4,
Maryland. 21204

Western States:—
Johnson Motors, Inc.,
P.O. Box 457,
267 West Colorado Boulevard
Pasadena,
California. 91102

Item	Part No.	Description	6T	TR6R	T120R	TR6C	T120C
Fig. 1							
13	CP201	Piston 11.2 C.R.	W –	–	–	–	2
20	E5450	Engine sprocket, 29 teeth Duplex	W –	–	–	1	1
21	E4912	Distance piece	W –	–	–	1	1
—	E4913	Dowel	W –	–	–	1	1
23	54215824	Rotor, type RM 19	W –	–	–	1	1
Fig. 5							
9	E5727	CYLINDER HEAD ASSEMBLY	W –	–	–	–	1
12	E5351	Carburetter adaptor, left	W –	–	–	–	1
13	E5352	Carburetter adaptor, right	W –	–	–	–	1
Fig. 6							
11	47602	CONTACT BREAKER, type 4CA	W –	–	–	1	1
29	45149	IGNITION COIL, type 3ET	W –	–	–	2	2
—	F6112	Coil bracket	W –	–	–	4	4
41	F1756	Bolt ($\frac{3}{4}$ in. U.H.)	W –	–	–	2	2
—	W932	Bolt (1 in. U.H.)	W –	–	–	4	4
—	F6125	Returner	W –	–	–	2	2
—	F6136	Retainer	W –	–	–	2	2
—	S25-43	Plain washer	W –	–	–	2	2
—	F879	Nut	W –	–	–	7	7
—	E1612	Serrated washer	W –	–	–	8	8
—	54441582	Condenser	W –	–	–	2	2
—	DS57	Bolt ($\frac{7}{16}$ in. U.H.)	W –	–	–	1	1
45	—	Sparking plug, Champion N58R...	W –	–	–	–	2
Fig. 8							
3	T1912	Mainshaft high gear	E –	–	–	1	–
6	T968	Mainshaft second gear	E –	–	–	1	–
9	T974	Layshaft second gear	E –	–	–	1	–
11	T1844	Layshaft c/w high gear	E –	–	–	1	–
12	T973	Speedometer pinion	E –	–	–	1	–
14	T1820	Speedometer gear	E –	–	–	1	–
—	T1227	Blanking nut (speedo drive)	W –	–	–	1	1
21	T1918	Gearbox sprocket (19 teeth)	W 1	–	–	–	–
21	T1917	Gearbox sprocket (18 teeth)	E –	–	–	1	1
21	T1916	Gearbox sprocket (17 teeth)	W –	–	–	1	1
21	T1952	Gearbox sprocket (15 teeth)	E or W –	–	–	A	A
21	T1953	Gearbox sprocket (16 teeth)	E or W –	–	–	A	A
Fig. 10							
14	T1885	Driving plate (Bonded)	E & W 6	6	6	6	6
Fig. 11							
5	D444	Rear chain, 102 links	W –	–	–	1	1
18	47188	Stator, type RM 19	W –	–	–	1	1
18	47162	Stator, type RM 19	E & W 1	1	1	–	–
Fig. 12							
11	F5786	PROP STAND COMPLETE	E & W 1	1	1	1	1
Fig. 13							
15	64054164	SUSPENSION UNIT	E & W –	2	2	2	2
15	64054164	SUSPENSION UNIT	W 2	–	–	–	–
—	F5686	Rubber grommet (stop switch holes)	W –	–	–	2	2
Fig. 15							
1	E4884	Left exhaust pipe	E & W –	–	–	1	1
2	E4886	Right exhaust pipe	E & W –	–	–	1	1
3	E4501	Finned clip	E & W 2	2	2	2	2
9	E3469	Clip	E & W –	–	–	2	2
10	TE164E	Bolt	E & W –	–	–	2	2

Item	Part No.	Description		6T	TR6R	T120R	TR6C	T120C
11	TE164D	"D" washer	E & W	–	–	–	2	2
—	TE164C	"D" Nut	E & W	–	–	–	2	2
14	E4132	Left silencer	E	–	–	–	1	1
14	E4176	Right silencer	E	–	–	–	1	1
—	E4183	Left extension pipe	W	–	–	–	1	1
—	E4184	Right extension pipe	W	–	–	–	1	1
—	E4889	Sleeve nut	E & W	–	–	–	2	2
—	E4887	Left stay	E & W	–	–	–	1	1
—	E4981	Right stay	E & W	–	–	–	1	1
—	H590	Bolt ($\frac{9}{16}$ in. U.H.)	E & W	–	–	–	4	4
—	S26-3	Spring washer	E & W	–	–	–	4	4
18	F5087	Left pillion footrest support	E & W	–	–	–	1	1
18	F5088	Right pillion footrest support	E & W	–	–	–	1	1
19	H426	Bolt ($\frac{23}{32}$ in. U.H.)	E & W	–	–	–	2	2
—	S26-1	Spring washer	E & W	–	–	–	2	2
20	S1-52	Nut	E & W	–	–	–	2	2
—	E4204	Leg guard	E & W	–	–	–	2	2
—	E4207	Clip	E & W	–	–	–	4	4
—	F4715	Screw	E & W	–	–	–	4	4
—	E2351	Plain washer	E & W	–	–	–	4	4
—	F3799	Self locking nut	E & W	–	–	–	4	4
Fig. 16								
—	H1580	Steady rubber	E & W	2	–	–	–	–
—	H1581	Distance piece	E & W	2	–	–	–	–
—	F3814	Cup	E & W	2	–	–	–	–
23A	54336177	Nut, for ignition switch	E & W	1	–	–	–	–
26A	180316	Nut, for lighting switch	E & W	1	–	–	–	–
Fig. 18								
1	H1716	FORK ASSEMBLY	E	–	–	–	1	1
1	H1717	FORK ASSEMBLY	W	–	–	–	1	1
8	H1287	TOP LUG c/w CAP	E & W	–	–	–	1	1
—	H506	Cup	E & W	–	–	–	2	2
—	S25-3	Plain washer	E & W	–	–	–	4	4
12	H1340	Bolt ($1\frac{1}{8}$ in. U.H.)	E & W	–	–	–	4	4
18 & 19	H1696	Top cover	W	–	–	–	2	2
—	H1580	Steady rubber	E & W	–	2	2	–	–
—	H1581	Distance piece	E & W	–	2	2	–	–
—	F3814	Cup	E & W	–	2	2	–	–
42	H1758	Restrictor body	W	–	–	–	2	2
—	H1707	Rod	W	–	–	–	2	2
—	H1764	Cup	W	–	–	–	2	2
—	H454	Pin	W	–	–	–	2	2
—	H452	Restrictor valve	W	–	–	–	2	2
—	F879	Nut	W	–	–	–	2	2
—	H1761	Restrictor body cap	W	–	–	–	2	2
—	T224	Nut	W	–	–	–	4	4
34	H1762	Cap nut	W	–	–	–	2	2
Fig's 19 & 20								
		For front and rear wheels for all models *except* Eastern 6T read as for TR6.						
Fig. 24								
23	F5957	AIR FILTER	E & W	–	1	–	1	–
23	F5693	AIR FILTER	E & W	1	–	–	–	–
24	F5694	Filter element (paper)	E & W	1	–	–	1	–
—	E5262	AIR FILTER	E & W	–	–	1	–	1
—	E5267	Filter element	E & W	–	–	1	–	1
—	E5268	Rubber connector	E & W	–	–	2	–	2

Item	Part No.	Description		6T	TR6R	T120R	TR6C	T120C
—	F6036	Clip	E & W	–	–	2	–	2
—	F5857	Cap	E & W	–	–	2	–	2
—	F4743	Bolt ($2\frac{1}{8}$ in. U.H.)	E & W	–	–	1	–	1
—	S26-2	Spring washer	E & W	–	–	2	–	2
—	F879	Nut	E & W	–	–	2	–	2
—	F6061	Bracket	E & W	–	–	1	–	1
—	DS57	Bolt ($\frac{7}{16}$ in. U.H.)	E & W	–	–	1	–	1
18	F4875	Tool carrier	W	–	–	–	1	1
Fig. 25								
—	F5427	Grommet (for switch holes)	W	–	–	–	–	2
27	F5366A	TWINSEAT	E	1	1	1	1	1
Fig. 26								
1 & 8	H1677	Front mudguard (undrilled)	E & W	1	1	1	–	–
4 & 21	H1678	Bottom stay	E & W	1	1	1	–	–
10 & 14	H1683	Mudguard bridge	E & W	1	1	1	1	1
9 & 13	H1685	Bracket	E & W	2	2	2	–	–
12	H1681	Front stay	E & W	1	1	1	1	1
8	H1687	Front mudguard (polished)	E & W	–	–	–	1	1
13	H1688	Bracket	E & W	–	–	–	2	2
21	H1273	Bottom stay	E & W	–	–	–	1	1
33	F5955	Mudguard blade (polished)	W	–	–	–	1	1
43	F3363	Number plate	E	1	1	1	1	1
43	F3363	Number plate	W	1	1	1	–	–
—	F3327	Rubber grommet (rear mudguard)	W	–	–	–	2	2
Fig. 27								
1	H1694	Handlebar	E & W	1	–	–	–	–
1	H1511	Handlebar	E & W	–	1	1	1	1
3	313/6	Twistgrip	E & W	–	–	1	–	1
13	18/935	Front brake lever	E & W	–	1	1	1	1
23	18/993	Clutch lever	E & W	–	1	1	–	–
23	18/993	Clutch lever	E	–	–	–	1	1
23	18/942	Clutch lever	W	–	–	–	1	1
Fig. 28								
4	D417	Front brake cable	E & W	1	1	1	1	1
15	D528	Throttle cable	E & W	–	–	2	–	2
29	H1580	Steady rubber	E & W	2	2	2	–	–
30	H1581	Distance piece	E & W	2	2	2	–	–
31	F3814	Cup	E & W	2	2	2	–	–
Fig. 30								
22	376/100	Main jet, size 270	E & W	1	–	–	–	–
Fig. 31								
23	376/100	Main jet, size 310	E & W	–	1	–	1	–
23	376/100	Main jet, size 260	E & W	–	–	2	–	2
Note: West Coasts T120C has $1\frac{3}{16}$ in. carburetters with 330 main jet.								
47	E4918	Insulating block	W	–	–	–	–	2
48	E4949	Joint washer	W	–	–	–	–	2
Fig. 32								
15	54934830	Wiring harness	W	–	–	–	1	1
16A	54336177	Nut, for ignition switch	E & W	–	1	1	–	–
19A	180316	Nut, for lighting switch	E & W	–	1	1	–	–
—	31376	Cut-out button, type SS5	W	–	–	–	1	1
—	H1669	Cup	W	–	–	–	1	1
—	H1670	Clip	W	–	–	–	2	2
—	H687	Bolt ($\frac{3}{8}$ in. U.H.)	W	–	–	–	1	1
—	H745	Nut	W	–	–	–	1	1
Fig. 33								
38A	D546	Rubber plug for tachometer	W	–	–	–	1	1

TRIUMPH

SUPPLEMENT TO No. 2 "B" RANGE.

REPLACEMENT PARTS CATALOGUE

FOR POLICE THUNDERBIRD MODELS

FROM ENGINE No. DU.6547

INCLUDING ALTERNATIVE EQUIPMENT

TO BE READ AS FOR THUNDERBIRD 6T EXCEPT WHERE OTHERWISE STATED

Sorry for the poor quality of these last few pages - the "original" was a faded blue photocopy, and was very hard to work from!

TRIUMPH ENGINEERING CO. LTD., MERIDEN WORKS

ALLESLEY · COVENTRY · ENGLAND

This Supplement should be read in conjunction
with No. 2 'B' Range Replacement Parts Catalogue
WHICH SHOULD BE READ AS FOR THUNDERBIRD 6T
EXCEPT WHERE OTHERWISE STATED

LEGSHIELD FITTINGS

	Part No
Left legshield	F5792
Right legshield	F5793
Legshield eyebolt (3 in. U.H.) (4 off)	F5752
Legshield eyebolt ($1\frac{7}{8}$ in. U.H.) (2 off)	F6363
Legshield eyebolt ($\frac{7}{8}$ in. U.H.) (4 off)	F6362
Legshield eyebolt ($1\frac{3}{8}$ in. U.H.) (2 off)	F6361
Rubber for eyebolt	F5794
Nut (8 off)	T224
Domed nut (6 off)	H400
Grommet (6 off)	F5753
Washer (12 off)	F4299
Bolt. Eye bolt to eye bolt (6 off)	F2603
Spring washer (6 off)	S26-3
Nut (6 off)	E1310

BLUE LAMP

Blue lamp (5 in.) 6 volt. Lucas L.724	S4173
Mounting bracket—for 5 in lamp	F6231
Bolt—lamp to bracket (3 off)	F4771
Nut (3 off)	F4717

Printed in England by Warwick Printing Co. Ltd. Warwick

Ref [illegible]

SUPPLEMENT TO No. 2 PARTS LIST FOR 1964 POLICE 6T

ALL PAGES TO BE READ AS FOR 6T EXCEPT WHERE OTHERWISE STATED

Page 13 CRANKSHAFT AND CONNECTING RODS

To be read as for TR6 except for the following items which are non standard

		Part No
Item 13	Piston	E3612
,, 14	Piston ring, compression (4 off)	E4631
,, 15	Piston ring, oil control (2 off)	E4632

Page 15. CRANKCASE

To be read as for TR6 except for the following items:—

Item 12	Chain oiler assy	E5318
Additional drip tube		T1702

Page 17. OIL PUMP AND RELEASE VALVE AND MANIFOLD

Item 35	Nut	W1058

Page 19. CYLINDER BLOCK AND HEAD

Item 9	Cylinder head C W guides	E5480
,, 10	Inlet valve guide	E3827
,, 11	Exhaust valve guide	E3928

Page 27 GEARBOX SHAFTS AND GEARS

Item 12	Speedometer pinion	T1747
,, 14	Speedometer gear	T1748
,, 21	Gearbox sprocket	T1917

Page 33. CHAINCASE AND CHAINS

Item 5	Rear chain ⅜ in. x ⅜ in. x 102 links	D444
,, 17	Stator stud (short) (1 off)	E5073
,, 18	Stator RM.20	47167

Page 35. FRAME

Item 5	Centre stand	F6117
,, 10	,, ,, return spring (2 off)	F4671
Additional	Attachment for additional spring	F6121
Item 15	Rear frame	F6026
,, 16	Stud (3⅛ in. O.A.)	F2842

Page 37. SWINGING FORK AND SUSPENSION UNITS

Item 21	Bolt, for bottom of suspension unit (2 off)	E2113
Additional	bolt, left top suspension unit (1 off)	F5730

Page 39. ENGINE UNIT FITTINGS AND FOOTRESTS

Item 1	Stud, front. Engine to Frame	F6224
,, 20	Stud (1⅛ in. O.A.)	E3114
,, 21	Bolt (⅛ in. U.H.)	H211

Page 41. EXHAUST PIPES AND SILENCERS

			Part No.
Item	1	Left exhaust pipe	E5673
,,	2	Right exhaust pipe	E5674
,,	14	Silencer (2 off)	E5191
,,	17	Bolt (¼ in U.H.). Drilled head	E5715
Additional		Stay—linking exhaust pipes and silencers (2 off)	E5676
,,		Bolt—stay to exhaust pipes (2 off)	H590
,,		Spring washer (2 off)	S26–3
,,		Nut (2 off)	S1–51

Page 45. NACELLE HEADLAMP AND SWITCHES

(Delete items 40 and 41)

Item	1	Nacelle top	H1783
,,	12	Headlamp complete	51860
,,	19	Bulb 6V (30 24W L.H. Dipping pre-focus)	373
,,	21	Bulb 6V (3W M.C.C.)	988
,,	31	Ammeter 30-0-30	36047
,,	36	Horn bracket	F6226
,,	37	Horn, Lucas 6H 6V.	70161
,,	38	Bolt—horn to bracket (2 off)	DS57
,,	39	Wiring Harness (with 549 358 47 link lead for horn)	540 944 64
Additional		Distance piece—for horn bracket	F6225
,,		Nut—(For item 38) (2 off)	F879
,,		Spring washer (For item 38) (2 off)	S26–2

Page 55. PETROL TANK

Item	1	Petrol tank	F5356
Additional		Rubber moulding. Petrol tank, radio	F4645

Page 57. OIL TANK

Item	20	Front strap—battery carrier	F6027
,,	21	Rear strap— ,, ,,	F5358
Additional		Clip	F5975
,,		Bolt, shouldered	F6028

Page 59. BATTERY CARRIER AND AIR FILTER

To be read as for TR6 except for the following:—

			Lucas
Item	6	Battery	SCZ7E
,,	8	Battery carrier assembly	F4563
,,	9	Top strap	F3588
Additional		Cradle—battery carrier	F4564
,,		Hinge pin	F1727
,,		Hinge—top strap	F4565
,,		Clamp screw	FS919
,,		Bract—clamp screw	F4567
Item	21	Adaptor sleeve	F5958
,,	22	Clip, air filter to carb adaptor (Jubilee No. 2)	D177–9

Page 61. PANELS AND SEAT

	Part No.
To be read as for TR6 except for the following :—	
Item 17 Switch panel	F6034
Additional Grommet—at switch holes (2 off)	F5427
,, Bracket—front, top of switch panel	F6035
,, Bolt ,, ,, ,, ,, ,,	F1369
,, Nut ,, ,, ,, ,, ,,	E5269
Item 27 Seat assembly—single seat	F5718
Additional Hinge bracket (1 off)	F5733
Item 27 Radio twinseat	F4730

Page 63. MUDGUARDS

To be read as for TR6 except for the following :—	
Item 41 Inflator bracket	F5433

Page 67. CONTROL CABLES

Item 14 Throttle cable	D519

Page 73. AMAL CARBURETTERS

To be read as for TR6

Page 75. RECTIFIER

Item 37 Rectifier—C W nut	47142

Page 77. SPEEDOMETER, TACHOMETER AND TAIL LAMP

Item 1 Speedometer (certified) M.P.H.	SSM 5002/02
,, 1 Speedometer (certified) K.P.H.	SSM5002/03
,, 3 Bulb 6v. 3W. M.E.S.	990
,, 20 Stop and tail lamp	53432
,, 30 Bulb 6v. 6·18W. offset pin	384

ALTERNATIVE EQUIPMENT
TWINSEAT AND RADIO CARRIER

Radio twin seat	F4730
Radio carrier	F4736
Bolt, long. Carrier to twinseat (2 off)	F4743
Bolt, medium. ,, ,, ,, ,,	F4744
Bolt, short ,, ,, ,, (1 off)	DS57

ALTERNATIVE EQUIPMENT
APPLICABLE TO 12 VOLT MODELS

Battery Carrier

Battery carrier (1 off)	F5742
Lower fixing bracket (1 off)	F5747
Retaining strap. Battery carrier (1 off)	F5749
Rubber pad. ,, ,, ,,	F5768
Battery retaining strap assembly	F6072
Retaining pin (1 off)	F5989
Bolt, bottom bracket—battery carrier (1 off)	F5331
Washer ,,	F5228
Spring washer ,,	S26-3
Nut ,,	T224

Fittings

	Part No.
Bolt, top rear. Battery carrier (2 off)	F1369
Washer	S25-1
Nut	F879
Stepped stud, bottom. Pole to frame	F5765
Washer	S25-43
Nut	F3290

Batteries

Battery, Lucas 6v (2 off)	ML Z9E
Transfer for battery "Positive earth" (2 off)	A52
Battery vent pipe (2 off)	F4818
Rubber pad, between batteries (2 off)	F5768

12 volt Electrical Conversion Kit

Stator—RM19	47162
Ignition coil, 12 volt (2 off)	45110
Zenor Diode, with lugs	49345
Electric horn, 12 volt type 6H	70161
Headlamp bulb 12v (50 40W)	414
Pilot bulb 12v (6W)	989
Tail lamp bulb 12v (21 6W)	380
Wiring harness	540 945 23
Heat dissipation plate for Zenor Diode	F5762

AERIAL MOUNTING BRACKET

(With special rear mudguard drilled to accept same)

Rear mudguard blade (1 off)	F5766
Front bracket, aerial mounting (1 off)	F5750
Rear bracket	F6322
Bolt, front bracket to rear mudguard (2 off)	557
Washer (2 off)	S25-1
Nut (2 off)	F879

CRASH BAR

Crashbar	F5754
Clamp	F5756
Cap, for clamp	F5755
'U' bolt (2 off)	F5758
Spring washer (4 off)	S26-3
Nut (4 off)	S1-51
Clamp tube	F5757
Bracket, at clamp tube (2 off)	F5760
Bolt. Bracket to tube (2 off)	F5761
Spring washer (2 off)	S26-2
Nut (2 off)	P0172A
Stud, front. Engine to frame (when fitting crashbar)	F5759