1957 ISSUE 13

TRIUMPH

REPLACEMENT PARTS

★

for

SPEED TWIN . THUNDERBIRD
TIGER 100 . TIGER 110
TROPHY
Models
From Engine No. 0945

TRIUMPH WIPAC CHAMPION Matchless BSA NGK SPARK PLUGS ARIEL

Classic BIKE SHOP

01527 454158
sales@classicbikeshop.co.uk
www.classicbikeshop.co.uk

Classic Motorcycle Parts for BSA, Triumph, Norton, AMC, Matchless and More.

Spares include Exhausts, Silencers, British and Custom Seats, Brake and Wheel Components, Lucas Equipment, Cafe Racer Parts, Engine and Frame Parts and thousands more items.

Classic Bike Shop Ltd is a long established business with its roots dating back to the 1950's. Based in Redditch Worcestershire. We provide an online mail order service supplying classic motorcycle parts directly to customers both locally and worldwide. We have an extensive range of classic bike parts and spares for Triumph, BSA, Norton, AMC, Matchless models and other vintage bikes. We also have a section on the website for cafe racers, bobbers and custom bikes if you are looking for something a little different to get that unique look.

PayPal MasterCard Maestro VISA VISA Electron

CHAMPION Matchless BSA NGK SPARK PLUGS ARIEL SURFLEX PER FRENI PER FRIZIONI HEPOLITE

PARTS INQUIRY FORM

If we do not have the parts you are looking for on our website please
Email your inquiry form to sales@classicbikeshop.co.uk
(Please note we will try our very best to get back to you as soon as we can, but some inquiries may take longer then others.)

Customer Information
Name:
Phone Number:
Email:

Part Number	Description	Qty

REPLACEMENT PARTS

FOR

TRIUMPH

MOTORCYCLES

COMMENCING
ENGINE No.
0945

SEPTEMBER, 1956

5T	-	SPEED TWIN
6T	-	THUNDERBIRD
T100	-	TIGER 100
T110	-	TIGER 110
TR5	-	TROPHY
TR6	-	TROPHY

TRIUMPH ENGINEERING COMPANY, LIMITED
MERIDEN WORKS, ALLESLEY
COVENTRY

Telegrams (for Spares)
"Trusty, Coventry"

Telephone
Meriden 331

ISSUE No. 13

Ref. 367/57

Published, September, 1957

PREFACE

BEFORE ordering parts for your machine, please read very carefully the instructions contained in the next paragraph. In a large number of cases, the information given in orders is not sufficient to enable us to identify customers' requirements with certainty. Delay is frequently occasioned by our having to refer the order back for further particulars before we can supply.

HOW TO ORDER. Every part is indicated by number, and this should be quoted together with the description. In order to assist customers, dimensions have been given in many cases where parts are similar. Parts where possible have been listed in order of assembly and a number of the illustrations show the assembly order also. With these aids there should be no difficulty in identifying the parts you require. Always head your order with the engine number, stamped on the drive side of the crank case underneath the cylinder flange, together with the prefix letters. Use a separate sheet for your order if you are sending a letter as well.

SPECIMEN ORDER

25/6/57

To Triumph Engineering Co. Ltd.,
Spares Department,
Meriden Works,
Allesley,
Coventry.

Engine No. 5T-200000

Please supply :—

1 - CP.29/20 - Piston Assy. + .020"
1 - E2899 - Guide, inlet valve

***Send C.O.D.**

Wm. Smith,
1a, Ewell Avenue,
Ewell, Surrey.

For terms of business see page 3.

TELEGRAPHIC ORDERS. Orders by telegram should be addressed to "Trusty 60221 Coventry". They are then telephoned to us, which prevents delay in delivery. It is only necessary to quote part numbers in telegraphic orders, the description can be omitted.

PATTERNS AND PARTS FOR REPAIR. It is not necessary to send patterns if the part number is quoted. The sending of patterns often delays the order as parcel post or rail takes longer than letter post.

Parts sent to Coventry for repair, replacement or as patterns should bear the sender's name and address and clear instructions should accompany the parts. All parts must be forwarded carriage paid and care should be taken to ensure that all remittances are sent separately and not enclosed with the parts. Fragile units such as cylinders, etc., should always be boxed to avoid damage in transit. Complete machines should have all fitments such as horns, driving mirrors, tools, etc., removed by the sender before despatch, as it is impossible for us to accept responsibility in the event of loss in transit. We are always pleased to give estimates for overhauling and repairs, but should an estimate not be accepted, a charge will be made covering cost of dismantling and re-assembling, if carried out.

Communications relating to Parts should be addressed to the SPARES MANAGER and for repairs, guarantee claims and technical advice to the SERVICE MANAGER, Triumph Engineering Co. Ltd., Meriden Works, Allesley, Coventry. In order to facilitate quick reference, the quoting of any number, invoice number or reference from previous communications is of essential importance. **Accessories not of our manufacture should be sent direct to the actual makers, whose names and addresses appear on Page 90.**

WHERE TO OBTAIN. Triumph Spare Parts may be obtained from any Triumph Dealer, and we recommend our customers to place their orders with the Triumph Dealer in their district, as we do not normally supply direct. When parts not usually asked for are required, and for which the Dealer may have to wire or obtain specially, the postage or carriage incurred becomes payable.

We are not able to supply Transfers as originally affixed to Triumph Motor Cycles, but we are at all times willing to supply a transfer denoting that the machine is of genuine Triumph manufacture, provided the Frame and Engine prefix letters and numbers are quoted.

Customers are warned against the risk incurred by purchasing parts that are not of genuine Triumph manufacture. This risk is eliminated if parts are ordered as instructed, either from our recognised Dealers, or direct from the Spares Department, Meriden Works, Allesley, Coventry.

TERMS OF BUSINESS

THE most convenient method of paying for Spare Parts is by the C.O.D. system. By this method you pay the postman for the goods when he delivers them to you. As the minimum C.O.D. collection fee is 1/2, only goods to the value of 2/- and over can be sent by this system. We do not despatch goods by rail C.O.D.

Where goods are not sent C.O.D., cash must accompany the order. All remittances should be made payable to the Triumph Engineering Co. Ltd., and crossed "Barclay's Bank Ltd." if in the form of Postal Order or cheque. Letters containing currency notes must be registered.

Should a remittance be forwarded by telegraphic money order, the name and address of the sender must be inserted in the space provided on the Post Office requisition form for a private message from remitter to payee. Unless this is complied with the Post Office omit such information from the telegram and we are not then in a position to trace the sender.

Postage, carriage and packing is charged at 5% on the value of the goods, minimum charge 1/-. Packing boxes, cases, crates, etc., are charged for at cost and are returnable.

SPEED TWIN (5T)

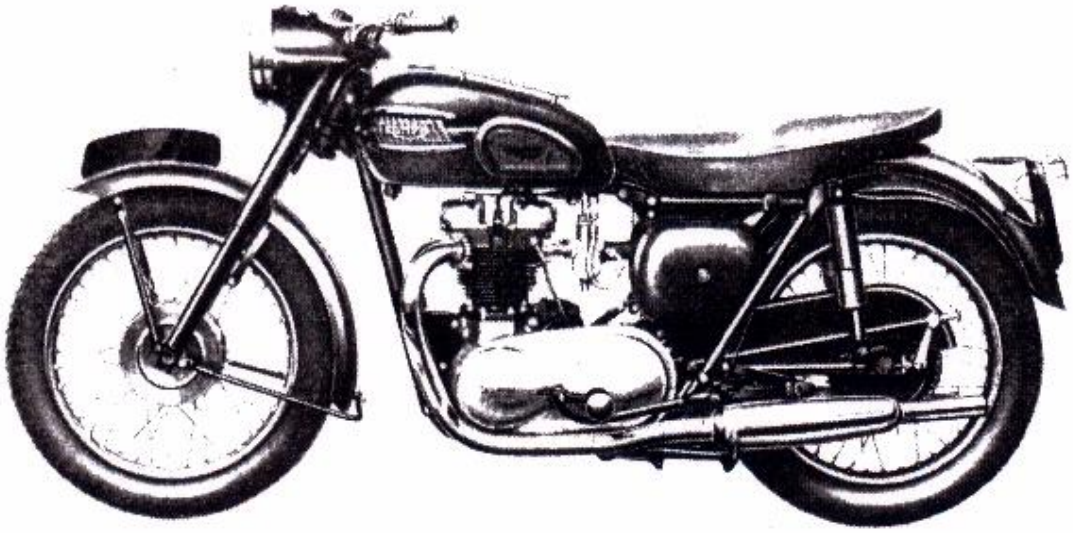

THUNDERBIRD (6T)

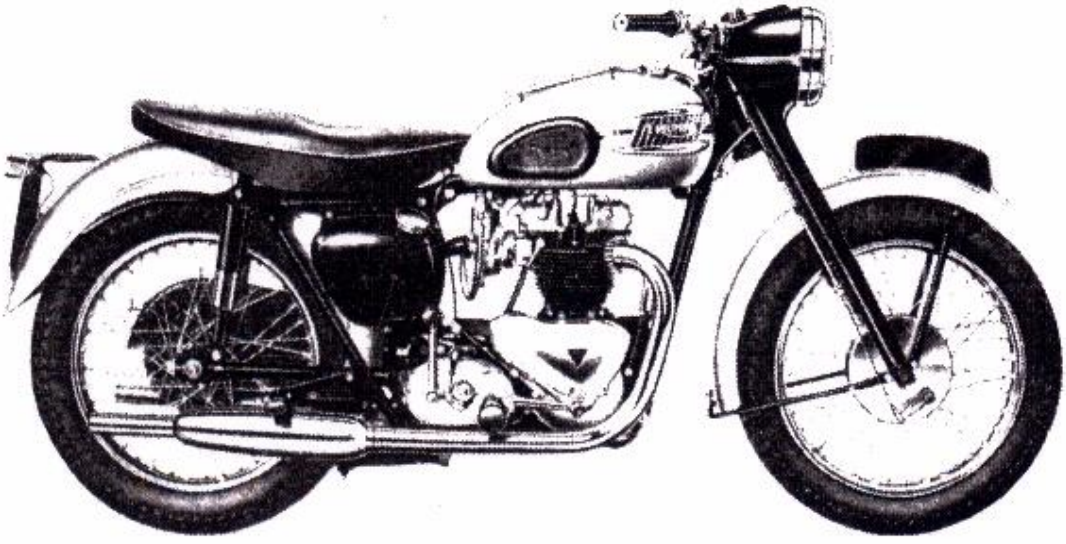

SPEED TWIN (5T)

SPECIFICATION

Bore and stroke, mm. ...	...63 × 80
ins. ...	2.48 × 3.15
Cylinder capacity c/cm (cu. ins.) ...	498 (30.5)
Compression ratio	7 : 1
Engine sprocket	22
Carburetter main jet (Amal) ...	200
Carburetter pilot jet (Amal) ...	30
Carburetter slide (Amal)	...376/3½
Carburetter needle jet (Amal) ...	.1065
Tappet clearance, cold ins. (mm.)	.010 (.26)
Ignition (fully retard) ins. (mm.) ...	1/32 (0.8) B.T.C.
Piston ring gap Compression— ins. (mm.) ...	.010-.014 (.25-.35)
Scraper— ins. (mm.) ...	.007-.011 (.18-.28)
Petrol tank, gallons (litres) ...	4 (18)
Oil tank, pints (litres)	5 (3)
Weight lbs. (dry) (kilos)...	380 (173)

THUNDERBIRD (6T)

SPECIFICATION

Bore and stroke, mm. ...	...71 × 82
ins. ...	2.79 × 3.23
Cylinder capacity c/cm (cu. ins.) ...	649 (40)
Compression ratio	7 : 1
Engine sprocket	24
Carburetter (S.U.)	Type MC2
Jet needle	M9
Tappet clearance, cold ins. (mm.)	.010 (.26)
Ignition (fully retard) ins. (mm.) ...	1/32 (0.8) B.T.C.
Piston ring gap (Compression and Scraper) ins. (mm.)	.010-.014 (.25-.35)
Petrol tank, gallons (litres) ...	4 (18)
Oil tank, pints (litres)	5 (3)
Weight, lbs. (dry) (kilos)	385 (175)

TIGER 100 (T100)

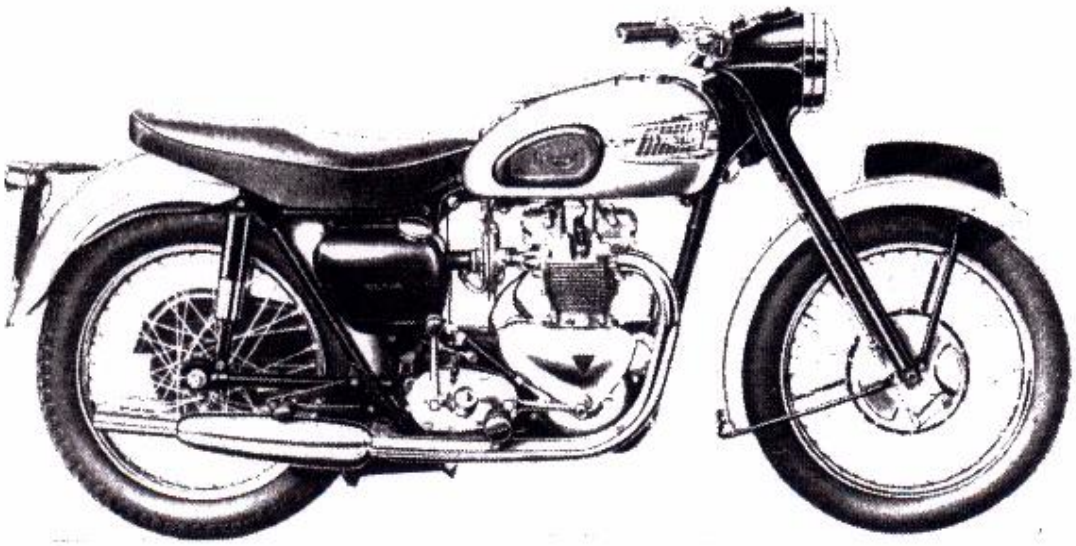

TIGER 110 (T110)

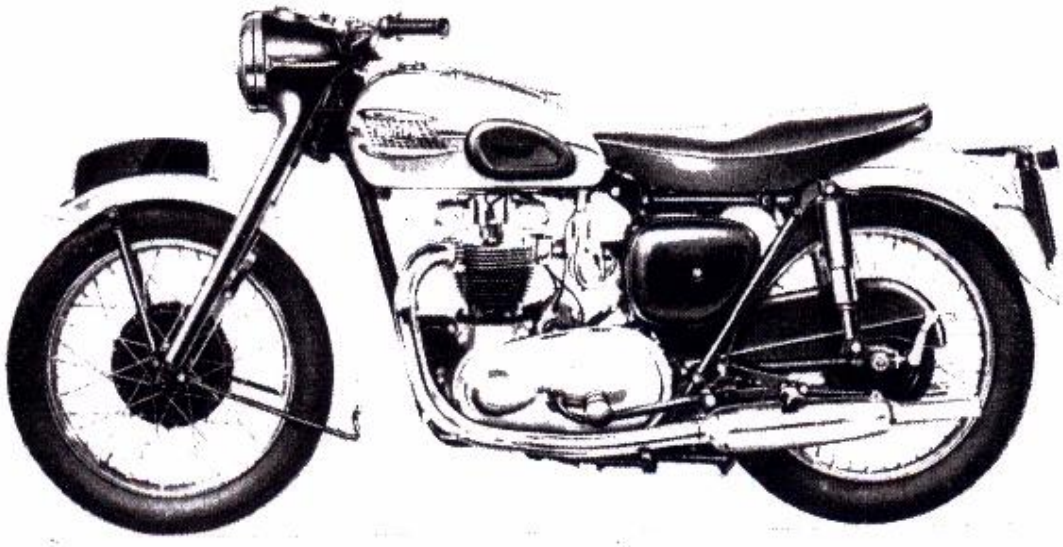

TIGER 100 (T100)

SPECIFICATION

Bore and stroke, mm. ...	...63 × 80
ins. ...	2.48 × 3.15
Cylinder capacity c/cm. (cu. ins.) ...	498 (30.5)
Compression ratio ...	... 8 : 1
Engine sprocket, solo ...	... 22
Carburetter main jet (Amal) ...	220
Carburetter pilot jet (Amal) ...	25
Carburetter slide (Amal)	...376/3½
Carburetter needle jet (Amal) ...	.1065
Tappet clearance, cold ins. (mm.)	.010 (.26)
Ignition, fully advanced ins. (mm.) ...	⅜ (9.5) B.T.D.C.
Piston ring gap Compression— ins. (mm.) ...	.010-.014 (.25-.35)
Scraper— ins. (mm.) ...	.007-.011 (.18-.28)
Petrol tank, gallons (litres)	... 4 (18)
Oil tank, pints (litres) ...	... 5 (3)
Weight lbs. (dry) (kilos)	375 (170)

TIGER 110 (T110)

SPECIFICATION

Bore and stroke, mm. ...	...71 × 82
ins. ...	2.79 × 3.23
Cylinder capacity c/cm. (cu. ins.) ...	649 (40)
Compression ratio ...	... 8 : 1
Engine sprocket, solo ...	... 24
Carburetter main jet (Amal) ...	*250
Carburetter pilot jet (Amal) ...	25
Carburetter slide (Amal)	...376/3½
Carburetter needle jet (Amal) ...	.1065
Tappet clearance, cold	... .004 ex (.10)
ins. (mm.) ...	... .002 in. (.05)
Ignition, fully advanced ins. (mm.) ...	23/64 (9.2) B.T.D.C.
Piston ring gap (Compression and Scraper) ins. (mm.)	.010-.014 (.25-.35)
Petrol tank, gallons (litres)	... 4 (18)
Oil tank, pints (litres) ...	... 5 (3)
Weight lbs. (dry) (kilos)	395 (179)

*270 without air filter

TROPHY (TR5)

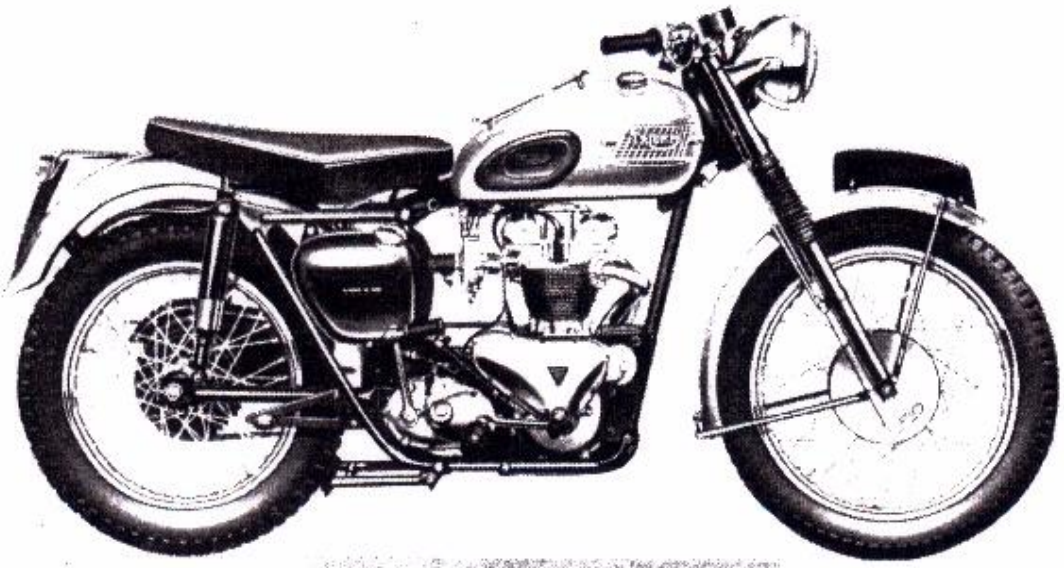

TROPHY (TR6)

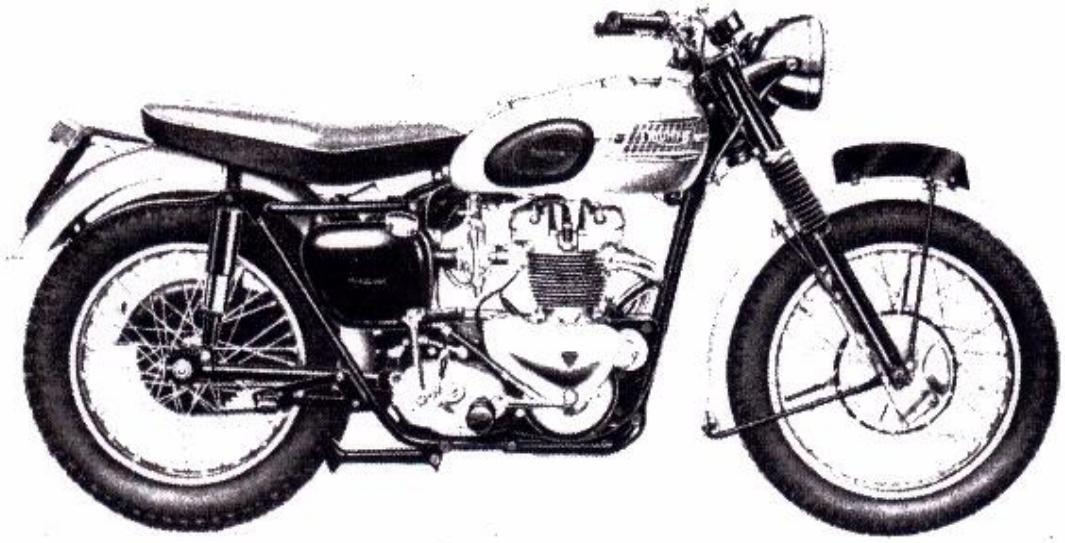

TROPHY (TR5)

SPECIFICATION

Bore and stroke, mm. ...	...63×80
ins. ...	2.48×3.15
Cylinder capacity c/cm. (cu. ins.) ...	498 (30.5)
Compression ratio	8 : 1
Engine sprocket	21
Carburetter main jet (Amal) ...	220
Carburetter pilot jet (Amal) ...	25
Carburetter slide (Amal) ..	376/3½
Carburetter needle jet (Amal) ...	.1065

Tappet clearance, cold ins. (mm.) ...	Inlet .002 (0.10) Exhaust .004 (0.05)
Ignition, fully advanced ins. (mm.) ...	15/32 (12) B.T.D.C.
Piston ring gap Compression— ins. (mm.) ...	.010-.014 (.25-.35)
Scraper— ins. (mm.) ...	.007-.011 (.18-.28)
Petrol tank, gallons (litres)	3 (13.5)
Oil tank, pints (litres) ...	... 5 (3)
Weight lbs. (dry) (kilos)	365 (166)

TROPHY (TR6)

SPECIFICATION

Bore and stroke, mm. ...	...71×82
ins. ...	2.79×3.23
Cylinder capacity c/cm. (cu. ins.) ...	649 (40)
Compression ratio	8 : 1
Engine sprocket, solo	24
Carburetter main jet (Amal) ...	*250
Carburetter pilot jet (Amal) ...	25
Carburetter slide (Amal) ...	376/3½
Carburetter needle jet (Amal) ...	.1065

Tappet clearance, cold ...	.004 ex (.10)
ins. (mm.)	.002 in. (.05)
Ignition, fully advanced ins. (mm.) ...	37/64 (9.2) B.T.D.C.
Piston ring gap (Compression and Scraper) ins. (mm.)	.010-.014 (.25-.35)
Petrol tank, gallons (litres) ...	4 (18)
Oil tank, pints (litres)	5 (3)
Weight lbs. (dry) (kilos)	370 (168)

* 270 without air filter

CARTON PACK COMPONENT LIST—GROUP 1

The following sub-assemblies are supplied in carton packs under the C.P. part number stated. The contents of these carton packs are preserved and will not deteriorate under adverse conditions.

PART No.			DESCRIPTION AND CONTENTS
Brake Lining			
CP.38	2	NW.243	Lining, brake
	16	W.129	Rivet
CP.66	2	W.631	Lining, brake
	16	W.129	Rivet
Crankcase Bearing			
CP.144	2	E.1591	Bearing ball, d/s and t/s
Fork (Telescopic) Service Pack			
CP.50	2	H.443	Bearing, lower
	2	H.441	Bearing, upper
	2	E.1335	Washer, copper
	4	H.430	Washer, drain filler plug
	2	H.452	Restrictor, oil
	2	H.453	Cup, oil restrictor
	2	H.454	Pin, restrictor cup
	2	H.391	Washer, dust excluder felt
	2	H.420	Washer, outer cover felt
	2	H.1065	Washer, aluminium
Gears, Standard Ratio			
CP.145	1	T.1382	Gear, mainshaft high
	1	T.916	Gear, mainshaft 2nd
	1	T.1063	Gear, layshaft and high
	1	T.1065	Gear, layshaft 2nd
	1	T.934	Gear, speedometer driven
Gears, Wide Ratio			
CP.94	1	T.1384	Gear, mainshaft high
	1	T.968	Gear, mainshaft 2nd
	1	T.971	Gear, layshaft and high
	1	T.974	Gear, layshaft 2nd
	1	T.975	Gear, speedometer driven

PART No.			DESCRIPTION AND CONTENTS
Gear, Close Ratio			
CP.95	1	T.1177	Mainshaft and low gear
	1	T.1383	Gear, mainshaft high
	1	T.1179	Gear, mainshaft 3rd
	1	T.955	Gear, mainshaft 2nd
	1	T.959	Layshaft and high gear
	1	T.964	Gear, layshaft 3rd
	1	T.963	Gear, layshaft 2nd
	1	T.961	Gear, layshaft low
	1	T.983	Plug, speedometer drive sealing
	1	T.948	Washer, speedometer drive plug
Kickstarter Ratchet Gear			
CP.27	1	T.730	Pinion, kickstarter
	1	T.731	Ratchet, kickstart
	1	T.1250	Spring, ratchet
	1	T.1338	Sleeve
	1	T.732	Lockwasher
Pistons 500 c.c. Models			
CP.109 ...	1	E.3052	Piston, CR. 5 : 1
	1	E.656	Ring, first compression
	1	E.3048	Ring, second compression (Taper)
	1	GE.29	Ring, scraper
	1	WE.203E ...	Pin, gudgeon
	2	WE.479	Circlip
CP.109/20 ...	1	E.3052/20 ...	Piston, +.020", CR. 5 : 1
	1	E.656/20	Ring, first compression
	1	E.3048/20 ...	Ring, second compression (Taper)
	1	GE.29/20 ...	Ring, scraper
	1	WE.203E... ...	Pin, gudgeon
	2	WE.479	Circlip
CP.37	1	E.1969	Piston, CR. 6 : 1
	1	E.656	Ring, first compression
	1	E.3048	Ring, second compression (Taper)
	1	GE.29	Ring, scraper
	1	WE.203E... ...	Pin, gudgeon
	2	WE.479	Circlip
CP.37/10 ...	1	E.1969/10 ...	Piston, +.010", CR. 6 : 1
	1	E.656/10	Ring, first compression
	1	E.3048/10 ...	Ring, second compression (Taper)
	1	GE.29/10... ...	Ring, scraper
	1	WE.203E... ...	Pin, gudgeon
	2	WE.479	Circlip

GROUP 1 – CARTON PACK

PART No.				DESCRIPTION AND CONTENTS
CP.37/20	1	E.1969/20		Piston, +.020", CR. 6 : 1
	1	E.656/20		Ring, first compression
	1	E.3048/20		Ring, second compression (Taper)
	1	GE.29/20		Ring, scraper
	1	WE.203E		Pin, gudgeon
	2	WE.479		Circlip
CP.29	1	E.1563		Piston, CR. 7 : 1
	1	E.656		Ring, first compression
	1	E.3048		Ring, second compression (Taper)
	1	GE.29		Ring, scraper
	1	WE.203E		Pin, gudgeon
	2	WE.479		Circlip
CP.29/10	1	E.1563/10		Piston, +.010", CR. 7 : 1
	1	E.656/10		Ring, first compression
	1	E.3048/10		Ring, second compression (Taper)
	1	GE.29/10		Ring, scraper
	1	WE.203E		Pin, gudgeon
	2	WE.479		Circlip
CP.29/20	1	E.1563/20		Piston, +.020", CR. 7 : 1
	1	E.656/20		Ring, first compression
	1	E.3048/20		Ring, second compression (Taper)
	1	GE.29/20		Ring, scraper
	1	WE.203E		Pin, gudgeon
	2	WE.479		Circlip
CP.29/30	1	E.1563/30		Piston, +.030", CR. 7 : 1
	1	E.656/30		Ring, first compression
	1	E.3048/30		Ring, second compression (Taper)
	1	GE.29/30		Ring, scraper
	1	WE.203E		Pin, gudgeon
	2	WE.479		Circlip
CP.29/40	1	E.1563/40		Piston, +.040", CR. 7 : 1
	1	E.656/40		Ring, first compression
	1	E.3048/40		Ring, second compression (Taper)
	1	GE.29/40		Ring, scraper
	1	WE.203E		Pin, gudgeon
	2	WE.479		Circlip

CARTON PACK – GROUP 1

PART No.				DESCRIPTION AND CONTENTS		
CP.131	...	1	... ...	E.1908	... ...	Piston, CR. 7.6 : 1
		1	... ...	E.656	... ...	Ring, first compression
		1	... ...	E.3048	... ...	Ring, second compression (Taper)
		1	... ...	GE.29	... ...	Ring, scraper
		1	... ...	WE.203E...	...	Pin, gudgeon
		2	... ...	WE.479	... ...	Circlip
CP.131/10	...	1	... ...	E.1908/10	...	Piston, +.010", CR. 7.6 : 1
		1	... ...	E.656/10	... ...	Ring, first compression
		1	... ...	E.3048/10	...	Ring, second compression (Taper)
		1	... ...	GE.29/10...	...	Ring, scraper
		1	... ...	WE.203E...	...	Pin, gudgeon
		1	... ...	WE.479	... ...	Circlip
CP.131/20	...	1	... ...	E.1908/20	...	Piston, +.020" CR. 7.6 : 1
		1	... ...	E.656/20	... ...	Ring, first compression
		1	... ...	E.3048/20	...	Ring, second compression (Taper)
		1	... ...	GE.29/20...	...	Ring, scraper
		1	... ...	WE.203E...	...	Pin, gudgeon
		1	... ...	WE.479	... ...	Circlip
CP.135	...	1	... ...	E.3098	... ...	Piston, CR. 8 : 1
		1	... ...	E.656	... ...	Ring, first compression
		1	... ...	E.3048	... ...	Ring, second compression (Taper)
		1	... ...	GE.29	... ...	Ring, scraper
		1	... ...	WE.203E...	...	Pin, gudgeon
		2	... ...	WE.479	... ...	Circlip
CP.135/10	...	1	... ...	E.3098/10	...	Piston, +.010" CR. 8 : 1
		1	... ...	E.656/10	... ...	Ring, first compression
		1	... ...	E.3048/10	...	Ring, second compression (Taper)
		1	... ...	GE.29/10...	...	Ring, scraper
		1	... ...	WE.203E...	...	Pin, gudgeon
		2	... ...	WE.479	... ...	Circlip
CP.135/20	...	1	... ...	E.3098/20	...	Piston, +.020", CR. 8 : 1
		1	... ...	E.656/20	... ...	Ring, first compression
		1	... ...	E.3048/20	...	Ring, second compression (Taper)
		1	... ...	GE.29/20...	...	Ring, scraper
		1	... ...	WE.203E...	...	Pin, gudgeon
		2	... ...	WE.479	... ...	Circlip

GROUP 1 – CARTON PACK

PART No.				DESCRIPTION AND CONTENTS
CP.133	...	1	E.2489	Piston, CR. 8.5 : 1
		1	E.656	Ring, first compression
		1	E.3048	Ring, second compression (Taper)
		1	GE.29	Ring, scraper
		1	WE.203E... ...	Pin, gudgeon
		2	WE.479	Circlip
CP.133/10	...	1	E.2489/10 ...	Piston, +.010", CR. 8.5 : 1
		1	E.656/10	Ring, first compression
		1	E.3048/10 ...	Ring, second compression (Taper)
		1	GE.29/10... ...	Ring, scraper
		1	WE.203E... ...	Pin, gudgeon
		2	WE.479	Circlip
CP.133/20	...	1	E.2489/20 ...	Piston, +.020" CR. 8.5 : 1
		1	E.656/20	Ring, first compression
		1	E.3048/20 ...	Ring, second compression (Taper)
		1	GE.29/20... ...	Ring, scraper
		1	WE.203E... ...	Pin, gudgeon
		2	WE.479	Circlip
CP.161	...	1	E.3615	Piston, CR. 9 : 1
		1	E.656	Ring, first compression
		1	E.3048	Ring, second compression (Taper)
		1	GE.29	Ring, scraper
		1	WE.203E... ...	Pin, gudgeon
		2	WE.479	Circlip
CP.161/20	...	1	E.3615/20 ...	Piston, +.020", CR.9 : 1
		1	E.656/20	Ring, first compression
		1	E.3048/20 ...	Ring, second compression (Taper)
		1	GE.29/20... ...	Ring, scraper
		1	WE.203E... ...	Pin, gudgeon
		2	WE.479	Circlip
CP.134	...	1	E.2884	Piston, CR. 9.5 : 1
		1	E.656	Ring, first compression
		1	E.3048	Ring, second compression (Taper)
		1	GE.29	Ring, scraper
		1	WE.203E... ...	Pin, gudgeon
		2	WE.479	Circlip
CP.132	...	1	E.2671	Piston CR. 12 : 1
		1	E.656	Ring, first compression
		1	E.3048	Ring, second compression (Taper)
		1	GE.29	Ring, scraper
		1	WE.203E... ...	Pin, gudgeon
		2	WE.479	Circlip

PART No.		DESCRIPTION AND CONTENTS
Pistons, 650 c.c. Models		
CP.158 ...	1	E.3611 ... ... Piston CR. 6.3 : 1
	1	E.2897 ... ... Ring, first compression
	1	E.3049 ... ... Ring, second compression (Taper)
	1	E.2898 ... ... Ring, scraper
	1	WE.203E ... Pin, gudgeon
	2	WE.479 ... ... Circlip
CP.98 (6T only)	1	E.2891 ... ... Piston, CR. 7 : 1
	1	E.2897 ... ... Ring, first compression
	1	E.3049 ... ... Ring, second compression (Taper)
	1	E.2898 ... ... Ring, scraper
	1	WE.203E... ... Pin, gudgeon
	2	WE.479 ... ... Circlip
CP.98/10 (6T only)	1	E.2891/10 ... Piston, +.010" CR. 7 : 1
	1	E.2897/10 ... Ring, first compression
	1	E.3049/10 ... Ring, second compression (Taper)
	1	E.2898/10 ... Ring, scraper
	1	WE.203E ... Pin, gudgeon
	2	WE.479 ... ... Circlip
CP.98/20 (6T only)	1	E.2891/20 ... Piston, +.020" CR. 7 : 1
	1	E.2897/20 ... Ring, first compression
	1	E.3049/20 ... Ring, second compression (Taper)
	1	E.2898/20 ... Ring, scraper
	1	WE.203E... ... Pin, gudgeon
	2	WE.479 ... ... Circlip
CP.159 ...	1	E.3612 ... ... Piston, CR. 7.5 : 1
	1	E.2897 ... ... Ring, first compression
	1	E.3049 ... ... Ring, second compression (Taper)
	1	E.2898 ... ... Ring, scraper
	1	WE.203E ... Pin, gudgeon
	2	WE.479 ... ... Circlip
CP.159/10 ...	1	E.3612/10 ... Piston, +.010", CR. 7.5 : 1
	1	E.2897/10 ... Ring, first compression
	1	E.3049/10 ... Ring, second compression (Taper)
	1	E.2898/10 ... Ring, scraper
	1	WE.203E... ... Pin, gudgeon
	2	WE.479 ... ... Circlip
CP.159/20 ...	1	E.3612/20 ... Piston, +.020", CR. 7.5 : 1
	1	E.2897/20 ... Ring, first compression
	1	E.3049/20 ... Ring, second compression (Taper)
	1	E.2898/20 ... Ring, scraper
	1	WE.203E... ... Pin, gudgeon
	2	WE.479 ... ... Circlip

GROUP 1 – CARTON PACK

PART No.		DESCRIPTION AND CONTENTS
CP.163	1	E.3670 Piston, CR. 8 : 1
	1	E.2897 Ring, first compression
	1	E.3049 Ring, second compression (Taper)
	1	E.2898 Ring, scraper
	1	WE.203E... Pin, gudgeon
	2	WE.479 Circlip
CP.163/10	1	E.3670/10 Piston, +·010", CR. 8 : 1
	1	E.2897/10 Ring, first compression
	1	E.3049/10 Ring, second compression (Taper)
	1	E.2898/10 Ring, scraper
	1	WE.203E... Pin, gudgeon
	2	WE.479 Circlip
CP.163/20	1	E.3670/20 Piston, +·020", CR. 8 : 1
	1	E.2897/20 Ring, first compression
	1	E.3049/20 Ring, second compression (Taper)
	1	E.2898/20 Ring, scraper
	1	WE.203E... Pin, gudgeon
	2	WE.479 Circlip
CP.157	1	E.3610 Piston, CR. 8.5 : 1
	1	E.2897 Ring, first compression (Taper)
	1	E.3049 Ring, second compression
	1	E.2898 Ring, scraper
	1	WE.203E... Pin, gudgeon
	2	WE.479 Circlip
CP.157/10	1	E.3610/10 Piston, +.010" CR. 8.5 : 1
	1	E.2897/10 Ring, first compression (Taper)
	1	E.3049/10 Ring, second compression
	1	E.2898/10 Ring, scraper
	1	WE.203E... Pin, gudgeon
	2	WE.479 Circlip
CP.157/20	1	E.3610/20 Piston, +.020", CR. 8.5 : 1
	1	E.2897/20 Ring, first compression (Taper)
	1	E.3049/20 Ring, second compression
	1	E.2898/20 Ring, scraper
	1	WE.203E... Pin, gudgeon
	2	WE.479 Circlip
CP.160	1	E.3613 Piston, CR. 12 : 1
	1	E.2897 Ring, first compression (Taper)
	1	E.3049 Ring, second compression
	1	E.2898 Ring, scraper
	1	WE.203E... Pin, gudgeon
	2	WE.479 Circlip

PART No.		DESCRIPTION AND CONTENTS
Piston Rings 500 c.c. Models		
CP.40	2	E.656 — Ring, first compression
	2	E.3048 — Ring, second compression (Taper)
	2	GE.29 — Ring, scraper
CP.40/10	2	E.656/10 — Ring, first compression
	2	E.3048/10 — Ring, second compression (Taper)
	2	GE.29/10 — Ring, scraper
CP.40/20	2	E.656/20 — Ring, first compression
	2	E.3048/20 — Ring, second compression (Taper)
	2	GE.29/20 — Ring, scraper
CP.40/40	2	E.656/40 — Ring, first compression
	2	E.3048/40 — Ring, second compression (Taper)
	2	GE.29/40 — Ring, scraper
Piston Rings 650 c.c. Models		
CP.99	2	E.2897 — Ring, first compression
	2	E.3049 — Ring, second compression (Taper)
	2	E.2898 — Ring, scraper
CP.99/10	2	E.2897/10 — Ring, first compression
	2	E.3049/10 — Ring, second compression (Taper)
	2	E.2898/10 — Ring, scraper
CP.99/20	2	E.2897/20 — Ring, first compression
	2	E.3049/20 — Ring, second compression (Taper)
	2	E.2898/20 — Ring, scraper
Valves		
CP.6 (5T)	2	E.1955 — Valve, inlet
	2	E.1956 — Valve, exhaust
CP.96 (6T)	2	E.2903 — Valve, inlet
	2	E.2904 — Valve, exhaust
CP.103 (T100, TR5)	2	E.2969 — Valve, inlet
	2	E.1956 — Valve, exhaust
CP.146 (T110, TR6)	2	E.3310 — Valve, inlet
	2	E.2904 — Valve, exhaust

GROUP I – CARTON PACK

PART No.		DESCRIPTION AND CONTENTS
Valve Guides		
CP.97	2	E.2899 Guide, inlet
	2	E.2900 Guide, exhaust
Valve Springs		
CP.5	4	E.1488 Spring, inner
	4	E.1487 Spring, outer
CP.102	4	E.3001 Spring, inner (racing)
	4	E.3002 Spring, outer (racing)
Steering Races		
CP.156	1	H.1018 Cone and dust cover, top
	1	H.439 Cone
	2	H.111 Cups
	40	S70-3 Balls
Sidecar Machine Jack		
CP.153	1	F.4028 Bracket
	1	F.2605 Bolt
	1	F.4029 Jack
Tachometer Drive Kit (for TR.5 and TR.6)		
CP.162	1	E.3677 Timing gear cover
	1	E.3678 Grub Screw
	1	E.3679 Bearing housing assembly
	1	E.3682 Bearing housing assembly
	1	E.3685 L.H. nut
	1	E.3686 Driving Gear
	1	H.1083 Mounting bracket
	1	RC.109 Tachometer head
	1	52091/5 Tachometer drive cable
	1	E.2749 Driven gear
	2	H.1086 Bolt mounting bracket

REPLACEMENT PARTS

REF. No.	PART No.	DESCRIPTION	5T	6T	TR5	T100	T110	TR6
		ENGINE—GROUP 2						
		CYLINDER BLOCK						
1	E3525	Block, cylinder	1	—	—	—	—	—
2	E3332	Block, cylinder	—	1	—	—	1	—
3	E3591	Block, cylinder	—	—	1	1	—	—
4	E3332/TR6	Block, cylinder	—	—	—	—	—	1
5	E2249	Washer, cylinder base	—	—	1	1	—	—
6	E2894	Washer, cylinder base	1	1	—	—	1	1
		CYLINDER HEAD						
7	E2928	Head, cylinder c/w guides	1	—	—	—	—	—
8	E3873	Head, cylinder c/w guides	—	1	—	—	—	—
9	*E3593	Head, cylinder c/w guides	—	—	1	1	—	—
10	E3644	Head, cylinder c/w guides	—	—	—	—	1	1
11	E2961	Adaptor, exhaust pipe	—	—	2	2	—	—
12	E3583	Adaptor, exhaust pipe	—	—	—	—	2	2
13	E2248	Gasket, cylinder head	1	—	—	—	—	—
14	E3614	Gasket, cylinder head	—	1	—	—	1	1
15	E3003	Gasket, cylinder head	—	—	1	1	—	—
16	E327	Bolt, cylinder head short $3\frac{3}{8}$" U/H ...	4	4	—	—	4	4
17	E1484	Bolt, cylinder head medium $5\frac{3}{8}$" U/H ...	2	2	—	—	2	2
18	E1596	Bolt, cylinder head (torque) $6\frac{31}{64}$" U/H ...	2	2	—	—	2	2
19	E1596A	Bolt, cylinder head (torque) $5\frac{7}{8}$" U/H ...	—	—	2	2	—	—
20	E2873	Bolt, cylinder head short $3\frac{3}{4}$" U/H ...	—	—	4	4	—	—
21	E2874	Bolt, cylinder head, medium $5\frac{3}{16}$" U/H ...	—	—	2	2	—	—
22	GS308	Washer, cylinder head bolt	4	4	—	—	—	—
23	F2184	Washer, cylinder head bolt	—	—	8	8	8	8
		INLET MANIFOLD						
24	E3576	Manifold, inlet	1	—	—	—	—	—
25	E3074	Manifold, inlet	—	1	—	—	—	—
26	E3307	Manifold, inlet	—	—	1	1	—	—
27	E3304	Manifold, inlet	—	—	—	—	1	1
28	E1552	Washer, inlet manifold joint	2	—	—	—	—	—
29	E1676	Washer, inlet manifold joint	—	2	—	—	—	—
30	E2967	Washer, inlet manifold joint	—	—	2	2	—	—
31	E3334	Washer, inlet manifold joint	—	—	—	—	2	2

* For splayed port T100 see Page 109

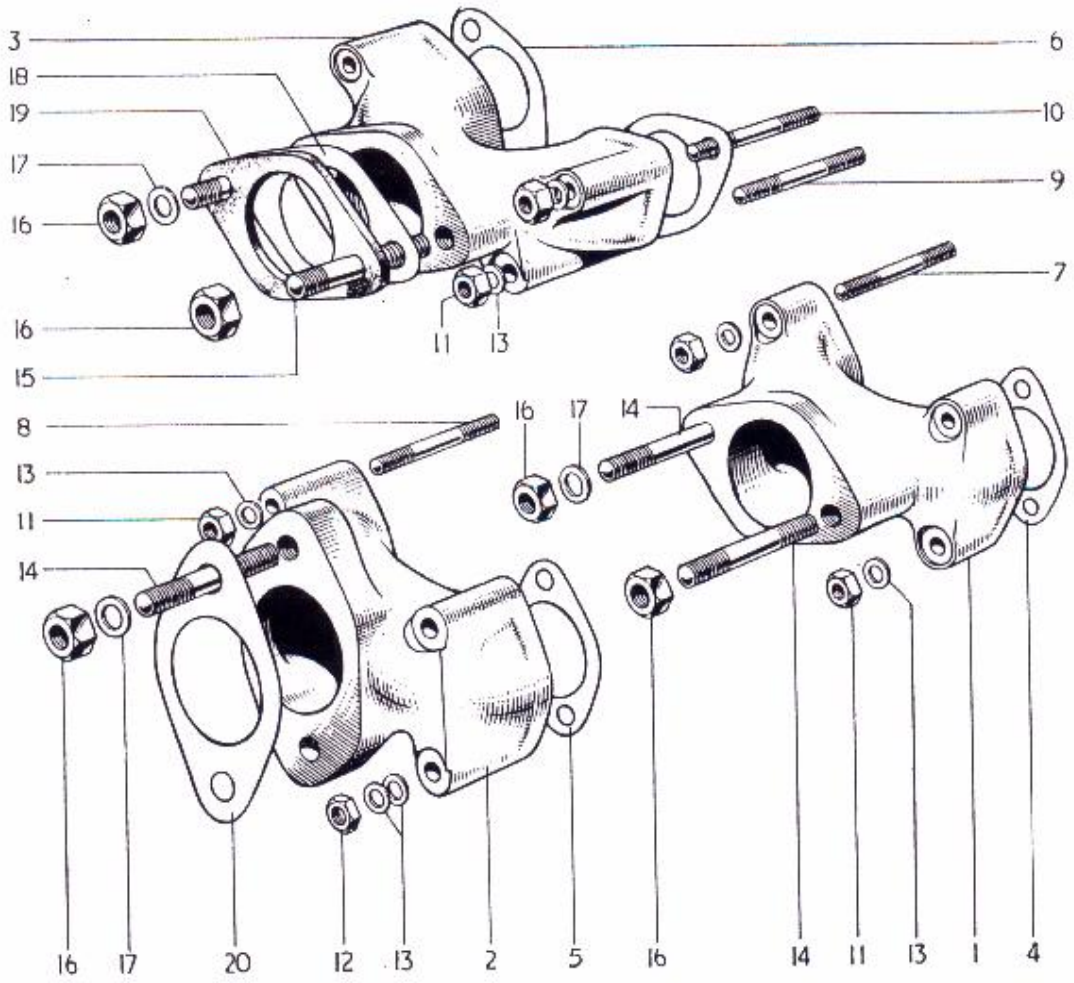

FIG. 1. INLET MANIFOLDS

INDEX

Illust. No.	Part No.	Page No.	Ref. No.	Illust. No.	Part No.	Page No.	Ref. No.
1	E3576	19	24	10	E2973	21	4
	E3304	19	27	11	W103	21	5
2	E3074	19	25	12	F879	21	6
3	E3307	19	26	13	S25-13	21	7
4	E1552	19	28	14	E1553	21	8
	E3334	19	31		E2962	21	9
5	E1676	19	29	15	E2962	21	9
6	E2967	19	30	16	S1-51	21	10
7	E1554	21	1	17	S25-3	21	11
	E2973	21	4	18	NA43A	93	10
8	E2920	21	2	19	E2968	93	11
9	E2972	21	3	20	E3075	94	3

REF. No.	PART No.	DESCRIPTION	5T	6T	TR5	T100	T110	TR6
1	E1554	Stud, inlet manifold to head ... 1 17/32" O/A	4	—	—	—	—	—
2	E2920	Stud, inlet manifold to head ... 1 29/32" O/A	—	4	—	—	—	—
3	E2972	Stud, inlet manifold to head, long 2 1/8" O/A	—	—	2	2	—	—
4	E2973	Stud, inlet manifold to head, short 1 5/16" O/A	—	—	2	2	4	4
5	W103	Nut, inlet manifold to head	4	3	4	4	4	4
6	F879	Nut, inlet manifold to head	—	1	—	—	—	—
7	S25-13	Washer, inlet manifold to head	4	5	4	4	4	4
8	E1553	Stud, carburetter fixing... 1 3/32" O/A ...	2	2	—	—	—	—
9	E2962	Stud, carburetter fixing... 1 7/32" O/A ...	—	—	2	2	2	2
10	SI-51	Nut, carburetter fixing	2	2	2	2	2	2
11	S25-3	Washer, carburetter fixing	1	2	1	1	1	1
12	E2415	Clip, H.T. leads to manifold	1	1	1	1	1	1
		VALVES, GUIDES AND SPRINGS						
13	E1955	Valve, inlet	2	—	—	—	—	—
14	E2903	Valve, inlet	—	2	—	—	—	—
15	E2969	Valve, inlet	—	—	2	2	—	—
16	E3310	Valve, inlet	—	—	—	—	2	2
17	E1956	Valve, exhaust	2	—	2	2	—	—
18	E2904	Valve, exhaust	—	2	—	—	2	2
19	E2899	Guide, inlet valve	2	2	2	2	2	2
20	E2900	Guide, exhaust valve	2	2	2	2	2	2
21	E1488	Spring, inner valve	4	4	4	4	4	4
22	E1487	Spring, outer valve	4	4	4	4	4	4
23	E1543	Collar, valve spring top	4	4	4	4	4	4
24	E1544	Cup, valve spring bottom	4	4	4	4	4	4
25	WE259A	Cotter, valve split	8	8	8	8	8	8
		PISTONS, RINGS, ETC.						
26	CP29	Piston complete, standard CR7 : 1	2	—	—	—	—	—
27	CP29/10	Piston complete, +.010" CR7 : 1	A	—	—	—	—	—
28	CP29/20	Piston complete, +.020" CR7 : 1	A	—	—	—	—	—
29	CP29/40	Piston complete, +.040" CR7 : 1	A	—	—	—	—	—
30	CP98	Piston complete, standard CR7 : 1	—	2	—	—	—	—
31	CP98/10	Piston complete, +.010" CR7 : 1	—	A	—	—	—	—
32	CP98/20	Piston complete, +.020" CR7 : 1	—	A	—	—	—	—
33	CP135	Piston complete, standard CR8 : 1	—	—	2	2	—	—
34	CP135/10	Piston complete, +.010" CR8 : 1	—	—	A	A	—	—
35	CP135/20	Piston complete, +.020" CR8 : 1	—	—	A	A	—	—
36	CP163	Piston complete, standard CR8 : 1	—	—	—	—	2	2
37	CP163/10	Piston complete, +.010" CR8 : 1	—	—	—	—	A	A
38	CP163/20	Piston complete, +.020" CR8 : 1	—	—	—	—	A	A
39	*CP159	Piston complete, standard CR7.5 : 1	—	—	—	—	A	A
40	*CP159/10	Piston complete, +0.010" CR7.5 : 1	—	—	—	—	A	A
41	*CP159/20	Piston complete, +0.020" CR7.5 : 1	—	—	—	—	A	A
42	E656	Ring, piston compression, standard	2	—	2	2	—	—
43	E656/10	Ring, piston compression, +.010	A	—	A	A	—	—

** Supplied as standard for Australian market.*

REF. No.	PART No.	DESCRIPTION	5T	6T	TR5	T100	T110	TR6
1	E656/20	Ring, piston compression, +.020"	A	—	A	A	—	—
2	E656/40	Ring, piston compression, +.040"	A	—	—	—	—	—
3	E3048	Ring, piston compression, standard (Taper) ...	2	—	2	2	—	—
4	E3048/10	Ring, piston compression, +.010" (Taper) ...	A	—	A	A	—	—
5	E3048/20	Ring, piston compression, +.020" (Taper) ...	A	—	A	A	—	—
6	E3048/40	Ring, piston compression, +.040" (Taper) ...	A	—	—	—	—	—
7	E2897	Ring, piston compression, standard	—	2	—	—	2	2
8	E2897/10	Ring, piston compression, +.010"	—	A	—	—	A	A
9	E2897/20	Ring, piston compression, +.020"	—	A	—	—	A	A
10	E3049	Ring, piston compression, standard (Taper) ...	—	2	—	—	2	2
11	E3049/10	Ring, piston compression, +.010" (Taper) ...	—	A	—	—	A	A
12	E3049/20	Ring, piston compression, +.020" (Taper) ...	—	A	—	—	A	A
13	GE29	Ring, piston scraper, standard	2	—	2	2	—	—
14	GE29/10	Ring, piston scraper, +.010"	A	—	A	A	—	—
15	GE29/20	Ring, piston scraper, +.020"	A	—	A	A	—	—
16	GE29/40	Ring, piston scraper, +.040"	A	—	—	—	—	—
17	E2898	Ring, piston scraper, standard	—	2	—	—	2	2
18	E2898/10	Ring, piston scraper, +.010"	—	A	—	—	A	A
19	E2898/20	Ring, piston scraper, +.020"	—	A	—	—	A	A
20	WE203E	Pin, gudgeon	2	2	2	2	2	2
21	WE479	Circlip, gudgeon pin	4	4	4	4	4	4

Piston assemblies (Alternative Compression Ratios) and piston ring sets are available in carton packs,
see pages 11 to 16.

CRANKSHAFT AND FLYWHEEL ASSEMBLY

22	E3451	Crankshaft and flywheel assembly	1	—	1	1	—	—
23	E3452	Crankshaft and flywheel assembly	—	1	—	—	1	1
24	E3306	Flywheel	1	1	1	1	1	1
25	E3453	Crankshaft, timing side c/w stud	1	—	1	1	—	—
26	E3454	Crankshaft, timing side c/w stud	—	1	—	—	1	1
27	E3455	Plug, T/S crankshaft	1	1	1	1	1	1
28	E3329	Crankshaft, driving side c/w stud	1	—	1	1	—	—
29	E3330	Crankshaft, driving side c/w stud	—	1	—	—	1	1
30	E3114	Stud, driving side, crankshaft 1 $\frac{3}{16}$" O/A ...	1	1	1	1	1	1
31	E1562	Bolt, crankshaft to flywheel 1 $\frac{3}{32}$" U/H ...	6	6	6	6	6	6
32	W103	Nut, crankshaft to flywheel bolt	6	6	6	6	6	6
33	E3456	Oil tube, crankshafts	1	1	1	1	1	1

REF. No.	PART No.	DESCRIPTION	5T	6T	TR5	T100	T110	TR6
		CONNECTING RODS						
1	E3606	Connecting rod, complete	2	2	2	2	2	2
2	E3586	Bearing, connecting rod big end	4	4	4	4	4	4
3	E1511	Bush, connecting rod small end	2	2	2	2	2	2
4	E2490A	Bolt, connecting rod to cap $2\frac{29}{64}$" U/H ...	4	4	4	4	4	4
5	E2922	Nut, connecting rod to cap bolt	4	4	4	4	4	4
		CRANKCASE						
6	E2220A/3281	Crankcase assembly less main bearings ...	—	—	1	1	—	—
7	E2892/3314	Crankcase assembly less main bearings ...	1	1	—	—	—	—
8	E2892/3282	Crankcase assembly less main bearings ...	—	—	—	—	1	1
9	E672	Stud, crankcase cylinder base ... $1\frac{5}{8}$" O/A	6	6	6	6	6	6
10	E3523	Stud, crankcase cylinder base (Dowel) $1\frac{5}{8}$" O/A	2	2	2	2	2	2
11	W76	Nut, crankcase cylinder base stud	4	4	—	—	4	4
12	PO172A	Nut, crankcase cylinder base stud	4	4	—	—	4	4
13	E2412	Nut, crankcase cylinder base stud	—	—	8	8	—	—
14	GS308	Washer, crankcase cylinder base stud ...	—	—	8	8	—	—
15	E1534A	Dowel, crankcase cylinder base stud (E3523)	2	2	2	2	2	2
16	E1579	Dowel, crankcase halves	1	1	1	1	1	1
17	E1534A	Dowel, crankcase halves hollow	1	1	1	1	1	1
18	E2022	Stud, magneto/distributor to crankcase $1\frac{3}{16}$" O/A	3	3	3	3	3	3
19	F1008	Nut, magneto to crankcase stud	—	—	3	3	3	3
20	S25-3	Washer, magneto to crankcase stud	—	—	3	3	3	3
21	S1-51	Nut, distributor to crankcase stud	3	3	—	—	—	—
22	E1539	Stud, oil junction block $1\frac{7}{32}$" O/A	1	1	1	1	1	1
23	S1-51	Nut, oil junction block stud	1	1	1	1	1	1
24	S23-3	Washer, oil junction block stud	1	1	1	1	1	1
25	E1532	Dowel, oil junction block	1	1	1	1	1	1
26	E1535	Dowel, crankcase to timing cover	1	1	1	1	1	1

Note.—Connecting rod assembly does not include E3586 big end bearings. These bearings are also available in 0.010" and 0.020" undersizes.

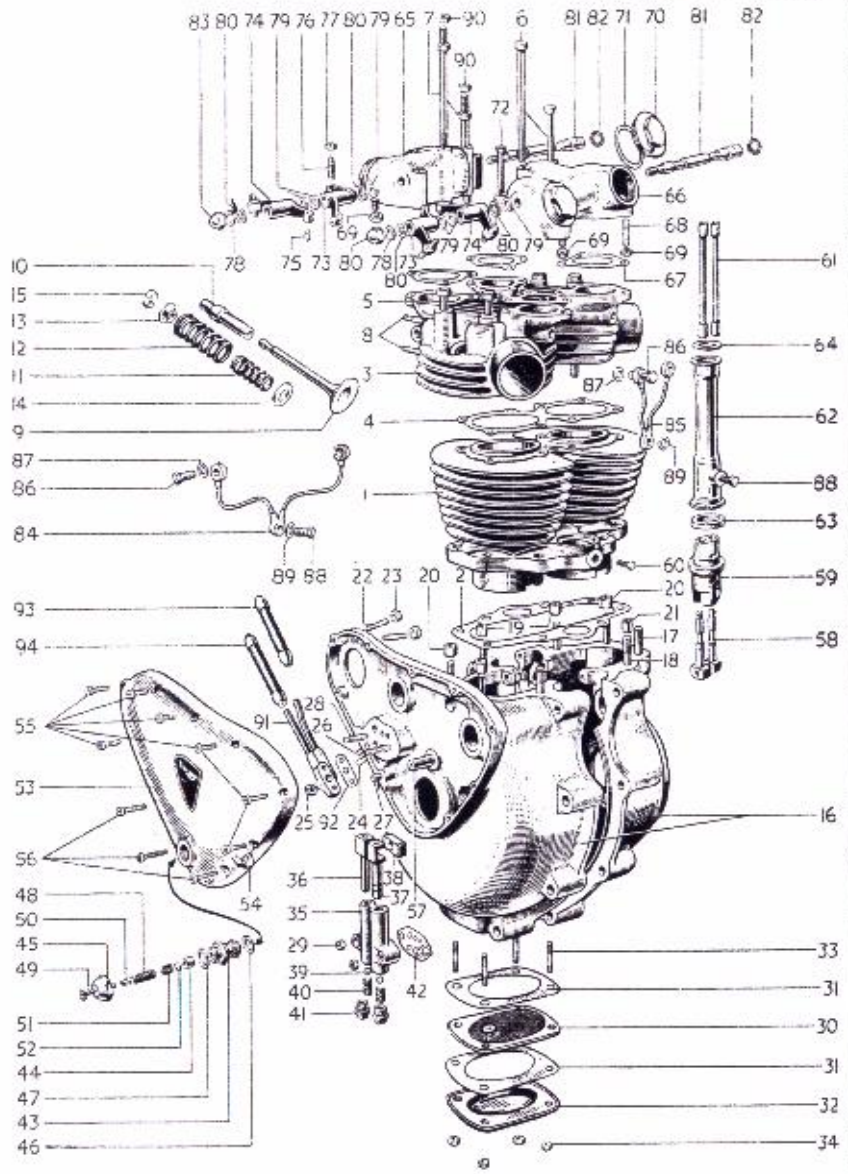

FIG. 2. CRANKCASE, CYLINDER BLOCK, CYLINDER HEAD, etc.

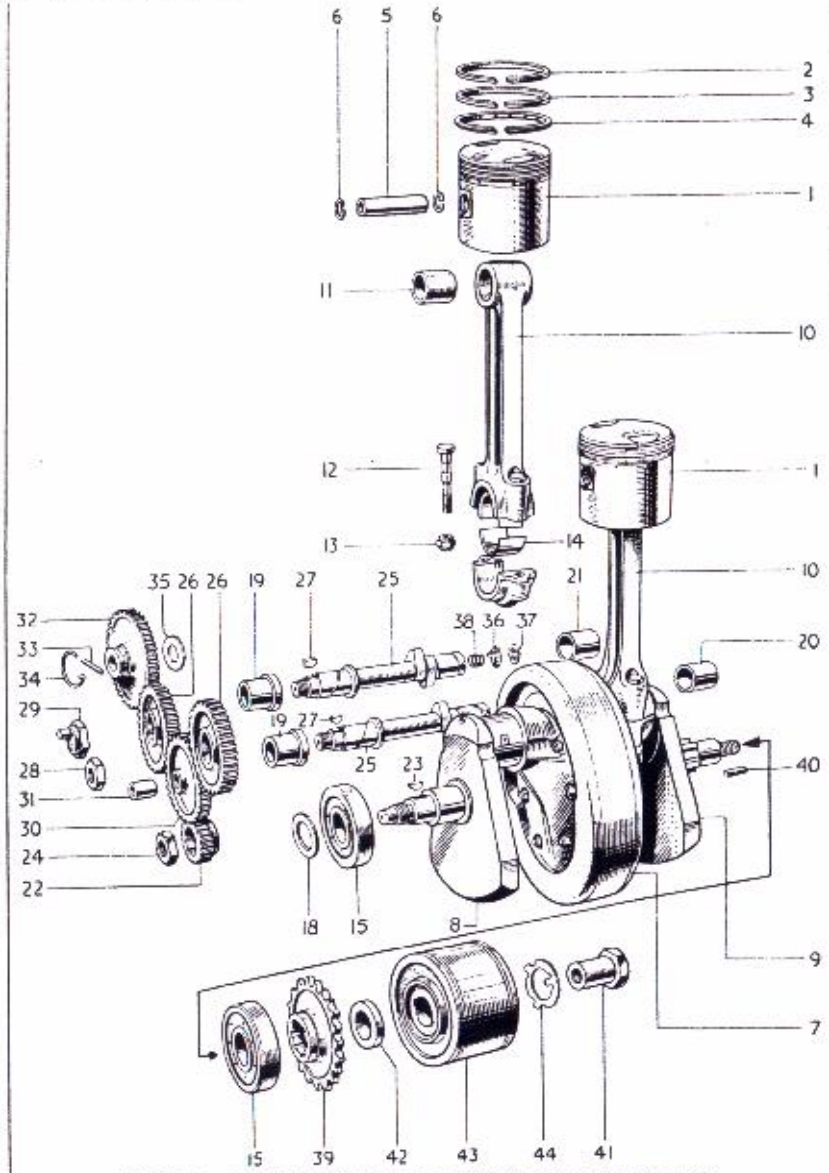

FIG. 3. CRANKSHAFT, CONNECTING RODS, PISTONS, TIMING GEAR, etc.

INDEX FIG. 2

Illust. No.	Part No.	Page No.	Ref. No.	Illust. No.	Part No.	Page No.	Ref. No.	Illust. No.	Part No.	Page No.	Ref. No.
1	E3525	19	1	31	E487	32	8	63	E1496	34	15
2	E2894	19	6	32	E486	32	9	64	E3547	34	16
3	E2928	19	7	33	E1540	32	10	65	E1461T	34	17
4	E2248	19	13	34	F879	32	12	66	E1462T	34	19
5	E327	19	16	35	GS35	32	27	67	E1650	34	21
6	E1484	19	17	36	GS153	32	28	68	E1540	34	23
7	E1596	19	18	37	E1476	32	29	69	F879	34	25
8	E1554	21	1	38	E495	32	30	70	E1564	34	27
9	E1955	21	13	39	S70-7	32	31	71	E1577	34	28
	E1956	21	17	40	E403	32	32	72	E1545	34	29
10	E2899	21	19	41	E2360	32	33	73	E1457	34	32
	E2900	21	20	42	E1537	32	34	74	E1458	34	33
11	E1488	21	21	43	E2794	33	2	75	E1483	34	34
12	E1487	21	22	44	GS251	33	3	76	E1513	34	35
13	E1543	21	23	45	E2790	33	4	77	E470	34	36
14	E1544	21	24	46	E1670	33	5	78	E1330	35	1
15	WE259A	21	25	47	GS254	33	6	79	E1575	35	2
16	E2892/3314	23	7	48	E2788	33	7	80	E1574	35	3
17	E672	23	9	49	E2791	33	8	81	E1512	35	4
18	E3523	23	10	50	E2793	33	9	82	E3253	35	5
19	W76	23	11	51	E2789	33	10	83	E1435	35	6
20	PO172A	23	12	52	E2792	33	11	84	GS272	35	10
21	E1534A	23	15	53	E3110/5T	33	12	85	GS273	35	11
22	E2022	23	18	54	E2615	33	24	86	E1601	35	12
23	S1-51	23	21	55	E3437	33	26	87	E1335	35	14
24	E1539	23	22	56	E3439	33	27	88	E984	35	15
25	S1-51	23	23	57	E375	33	39	89	E1880	35	16
26	E1532	23	25	58	E3059	34	6	90	S152	50	19
27	E1535	23	26	59	E1477	34	7	91	E3355	74	23
28	E1536	32	1	60	H200	34	9	92	E1529	74	24
29	F879	32	2	61	E1693	34	11	93	E3354	74	22
30	E529	32	7	62	E1505	34	13	94	E3353	74	21

INDEX FIG. 3

Illust. No.	Part No.	Page No.	Ref. No.	Illust. No.	Part No.	Page No.	Ref. No.	Illust. No.	Part No.	Page No.	Ref. No.
1	CP29	21	26	15	E1591	32	13	31	E400	33	38
2	E656	21	42	18	E3300	32	19	32	E3123	33	40
3	E3048	22	3	19	E1479	32	15	33	E3125	33	41
4	GE29	22	13	20	E1516	32	16	34	E3126	33	42
5	WE203E	22	20	21	E2260	32	17	35	146460	33	43
6	WE479	22	21	22	E1472	33	28	36	E2254	34	1
7	E3306	22	24	23	E1580	33	29	37	GS87	34	2
8	E3453	22	25	24	E398	33	30	38	E2256	34	3
9	E3329	22	28	25	E3275	33	31	39	E3108/22	35	18
10	E3606	23	1	26	E1486A	33	33	40	E3115	35	27
11	E1511	23	3	27	E1558	33	34	41	E3435	35	28
12	E2490A	23	4	28	E1492	33	35	42	E3116	35	31
13	E2922	23	5	29	E1463	33	36	43	465969	104	2
14	3586	23	2	30	E1471	33	37	44	465672	104	10

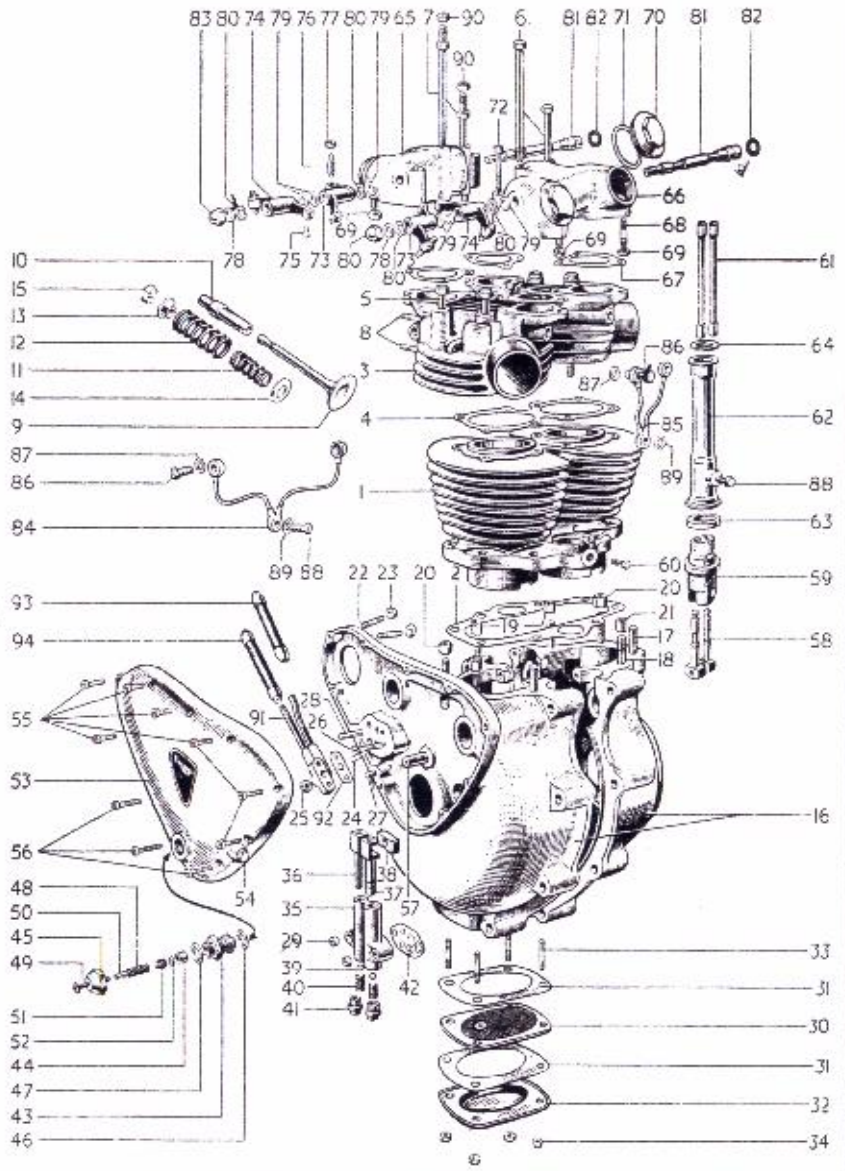

FIG. 4. CRANKCASE, CYLINDER BLOCK, CYLINDER HEAD, etc.

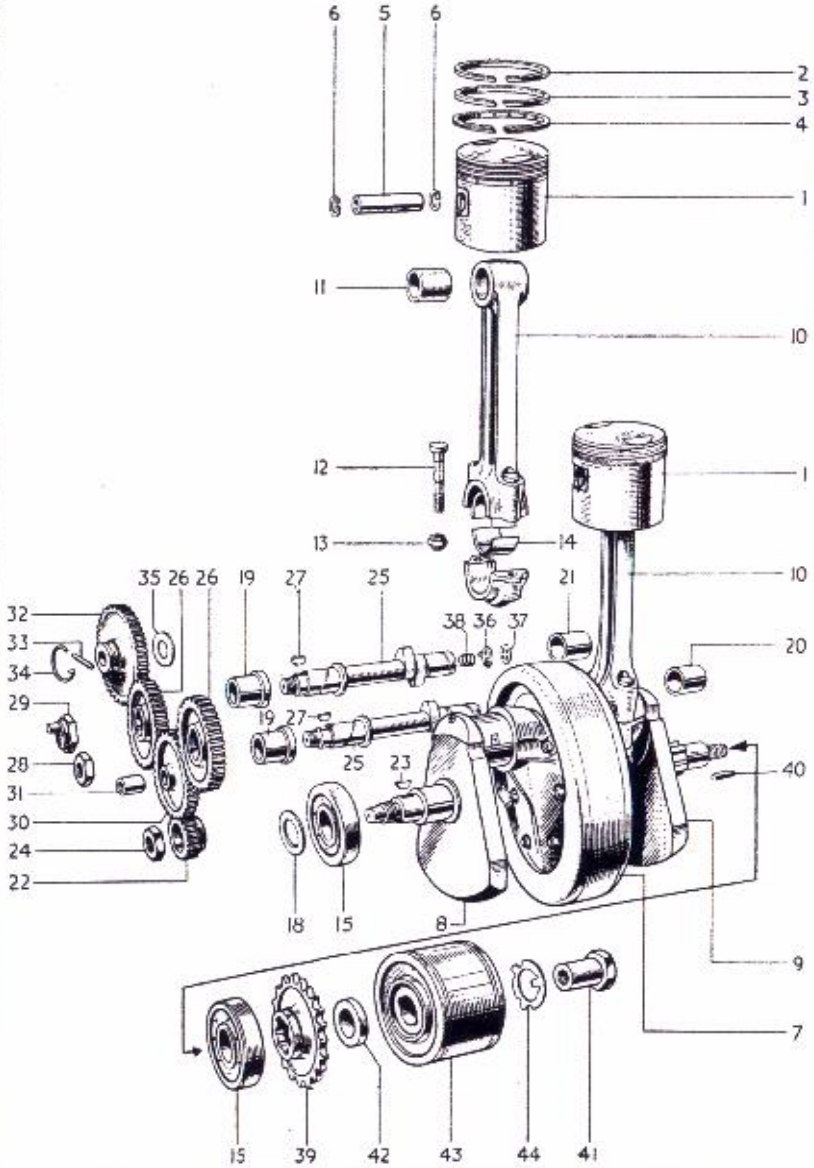

FIG. 5. CRANKSHAFT, CONNECTING RODS, PISTON TIMING GEAR, etc.

INDEX FIG. 4

Illust. No.	Part No.	Page No.	Ref. No.	Illust. No.	Part No.	Page No.	Ref. No.	Illust. No.	Part No.	Page No.	Ref. No.

FIG. 4. CRANKCASE, CYLINDER BLOCK, CYLINDER HEAD, etc.

FIG. 5. CRANKSHAFT, CONNECTING RODS, PISTON TIMING GEAR, etc.

INDEX FIG. 4

Illust. No.	Part No.	Page No.	Ref. No.	Illust. No.	Part No.	Page No.	Ref. No.	Illust. No.	Part No.	Page No.	Ref. No.
1	E3332	19	2	31	E487	32	8	63	E1469	34	15
2	E2894	19	6	32	E486	32	9	64	E3547	34	16
3	E3873	19	8	33	E1540	32	10	65	E1461T	34	17
4	E3614	19	14	34	F879	32	12	66	E1462T	34	19
5	E327	19	16	35	GS35	32	27	67	E1650	34	21
6	E1484	19	17	36	GS153	32	28	68	E1540	34	23
7	E1596	19	18	37	E1476	32	29	69	F879	34	25
8	E2920	21	2	38	E495	32	30	70	E1564	34	27
9	E2903	21	14	39	S70-7	32	31	71	E1577	34	28
	E2904	21	18	40	E403	32	32	72	E1545	34	29
10	E2899	21	19	41	E2360	32	33	73	E1457	34	32
	E2900	21	20	42	E1537	32	34	74	E1458	34	33
11	E1488	21	21	43	E2794	33	2	75	E1483	34	34
12	E1487	21	22	44	GS251	33	3	76	E1513	34	35
13	E1543	21	23	45	E2790	33	4	77	E470	34	36
14	E1544	21	24	46	E1670	33	5	78	E1330	35	1
15	WE259A	21	25	47	GS254	33	6	79	E1575	35	2
16	E2892/3314	23	7	48	E2788	33	7	80	E1574	35	3
17	E672	23	9	49	E2791	33	8	81	E1512	35	4
18	E3523	23	10	50	E2793	33	9	82	E3253	35	5
19	W76	23	11	51	E2789	33	10	83	E1435	35	6
20	PO172A	23	12	52	E2792	33	11	84	GS272	35	10
21	E1534A	23	15	53	E3310/6T	33	13	85	GS273	35	11
22	E2022	23	18	54	E2615	33	24	86	E1601	35	12
23	S1-51	23	21	55	E3437	33	26	87	E1335	35	14
24	E1539	23	22	56	E3439	33	27	88	E984	35	15
25	S1-51	23	23	57	E375	33	39	89	F1880	35	16
26	E1532	23	25	58	E3059	34	6	90	S1-52	50	19
27	E1535	23	26	59	E1477	34	7	91	E3355	74	23
28	E1536	32	1	60	H200	34	9	92	E1529	74	24
29	F879	32	2	61	E1693	34	11	93	E3354	74	22
30	E529	32	7	62	E1505	34	13	94	E3353	74	21

INDEX FIG. 5

Illust. No.	Part No.	Page No.	Ref. No.	Illust. No.	Part No.	Page No.	Ref. No.	Illust. No.	Part No.	Page No.	Ref. No.
1	CP98	21	30	18	E3300	32	19	33	E3125	33	41
2	E2897	22	7	19	E1479	32	15	34	E3126	33	42
3	E3049	22	10	20	E1516	32	16	35	146460	33	43
4	E2898	22	17	21	E2200	32	17	36	E2254	34	1
5	WE203E	22	20	22	E1472	33	28	37	GS87	34	2
6	WE479	22	21	23	E1580	33	29	38	E2256	34	3
7	E3306	22	24	24	E398	33	30	39	E3108/24	35	20
8	E3454	22	26	25	E3275	33	31	40	E3115	35	27
9	E3330	22	29	26	E1486A	33	33	41	E3435	35	28
10	E3606	23	1	27	E1558	33	34	42	E3116	35	31
11	E1511	23	3	28	E1492	33	35	43	465969	104	2
12	E2490A	23	4	29	E1463	33	36	44	465672	104	10
13	E2922	23	5	30	E1471	33	37				
14	E3586	23	2	31	E400	33	38				
15	E1591	32	13	32	E3123	33	40				

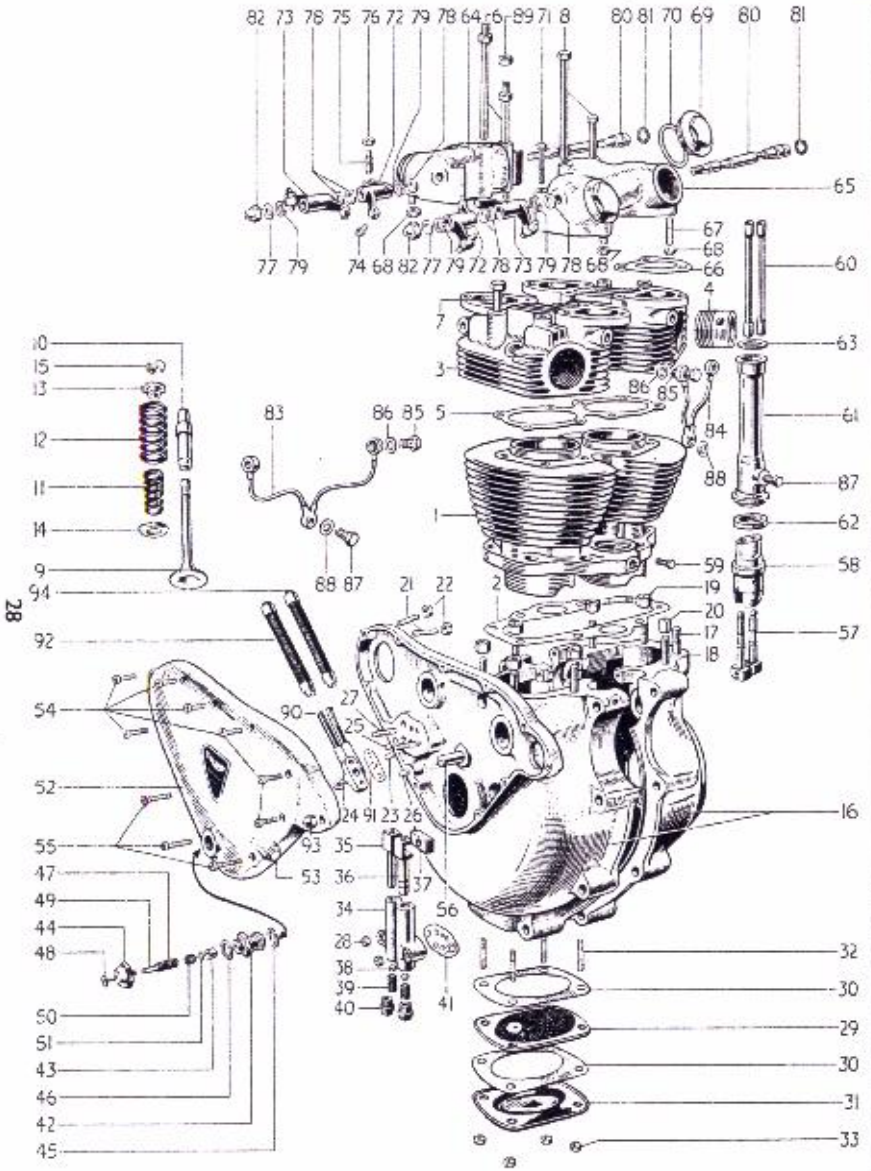

FIG. 6. CRANKCASE, CYLINDER BLOCK, CYLINDER HEAD, etc.

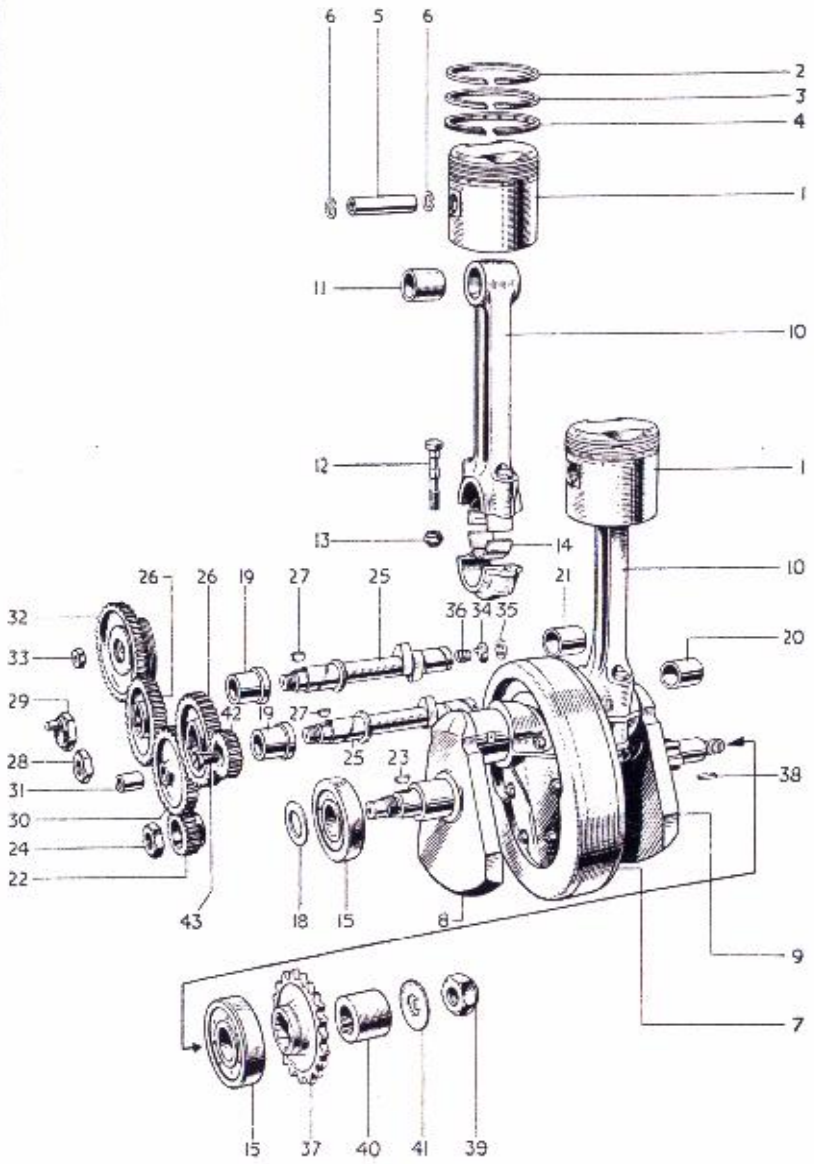

FIG. 7. CRANKSHAFT, CONNECTING RODS, PISTONS, TIMING GEARS, etc.

INDEX TO FIG. 6

Illust. No.	Part No.	Page No.	Ref. No.	Illust. No.	Part No.	Page No.	Ref. No.	Illust. No.	Part No.	Page No.	Ref. No.

FIG. 6. CRANKCASE, CYLINDER BLOCK, CYLINDER HEAD, etc.

FIG. 7. CRANKSHAFT, CONNECTING RODS, PISTONS, TIMING GEARS, etc.

INDEX FIG. 6

Illust. No.	Part No.	Page No.	Ref. No.
1	E3591	19	3
2	E2249	19	5
3	E3593	19	9
4	E2961	19	11
5	E3003	19	15
6	E1596A	19	19
7	E2873	19	20
8	E2874	19	21
9	E2969	21	15
	E1956	21	17
10	E2899	21	19
	E2900	21	20
11	E1488	21	21
12	E1487	21	22
13	E1543	21	23
14	E1544	21	24
15	WE259A	21	25
16	E2220A/3281	23	6
17	E672	23	9
18	E3523	23	10
19	E2412	23	13
20	E1534A	23	15
21	E2022	23	18
22	F1008	23	19
23	E1539	23	22
24	S1-51	23	23
25	E1532	23	25
26	E1535	23	26
27	E1536	32	1
28	F879	32	2
29	E529	32	7
30	E487	32	8
31	E486	32	9
32	E1540	32	10
33	F879	32	12
34	GS35	32	27
35	GS153	32	28
36	E1476	32	29
37	E495	32	30
38	S70-7	32	31
39	E403	32	32
40	E2360	32	33
41	E1537	32	34
42	E2794	33	2
43	GS251	33	3
44	E2790	33	4
45	E1670	33	5
46	GS254	33	6
47	E2788	33	7
48	E2791	33	8
49	E2793	33	9
50	E2789	33	10
51	E2792	33	11
52	E2218/T100	33	15
	E2218/Trophy	33	14
53	E2615	33	24
54	E3437	33	26
55	E3439	33	27
56	E375	33	39
57	E3059	34	6
58	GS36	34	8
59	H200	34	9
60	E2620	34	12
61	E1505	34	13
62	E1496	34	15
63	E3547	34	16
64	E1461T	34	17
65	E1462T	34	19
66	E1650	34	21
67	E2980	34	24
68	F879	34	25
69	E1564	34	27
70	E1577	34	28
71	E2982	34	30
72	E1457	34	32
73	E1458	34	33
74	E1483	34	34
75	E1513	34	35
76	E470	34	36
77	E1330	35	1
78	E1575	35	2
79	E1574	36	3
80	E1512	35	4
81	E3253	35	5
82	E1435	35	6
83	GS272	35	10
84	GS273	35	11
85	E2767	35	13
86	E1335	35	14
87	E984	35	15
88	F1880	35	16
89	S1-52	50	19
90	E3355	74	23
91	E1529	74	24
92	E3353	74	21
93	E2228	98	24
94	E3354	74	22

INDEX FIG. 7

Illust. No.	Part No.	Page No.	Ref. No.
1	CP135	21	33
2	E656	21	42
3	E3048	22	8
4	GE29	22	13
5	WE203E	22	20
6	WE479	22	21
7	E3306	22	24
8	E3453	22	25
9	E3329	22	28
10	E3606	23	1
11	E1511	23	3
12	E2490A	23	4
13	E2922	23	5
14	E3586	23	2
15	E1591	32	13
18	E3300	32	19
19	E1479	32	15
20	E1516	32	16
21	E2260	32	17
22	E1472	32	28
23	E1580	32	29
24	E398	32	30
25	E3275	33	31
	E3325	33	32
26	E1486A	33	33
27	E1558	33	34
28	E1492	33	35
29	E1463	33	36
30	E1471	33	37
31	E400	33	38
32	E2741	33	44
33	170104	33	45
34	E2254	34	1
35	GS87	34	2
36	E2256	34	3
37	E3108/21	35	21
	E3108/22	35	18
38	E3115	35	27
39	E3120	35	29
40	E3384	35	30
41	E3119	35	32
42	E2451	98	21
43	111704	98	22

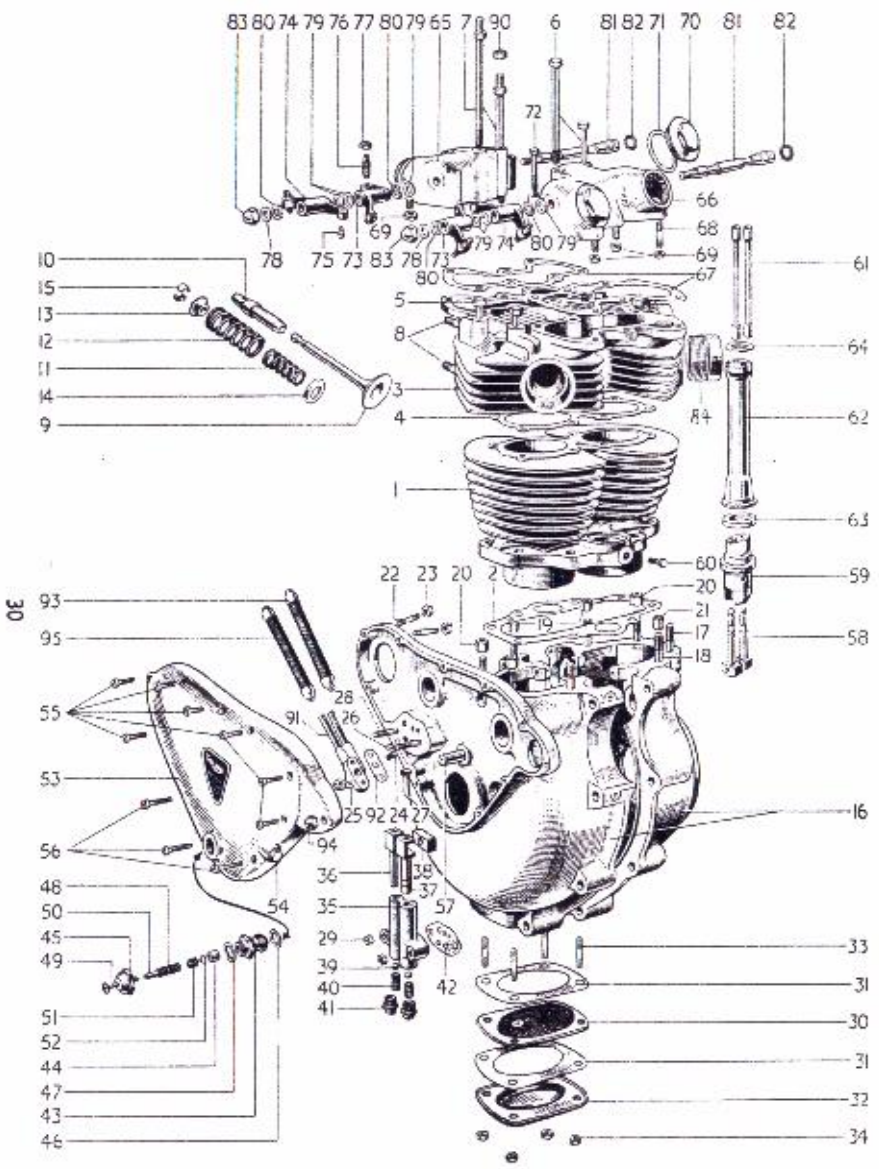

FIG. 8. CRANKCASE, CYLINDER BLOCK, CYLINDER HEAD, etc.

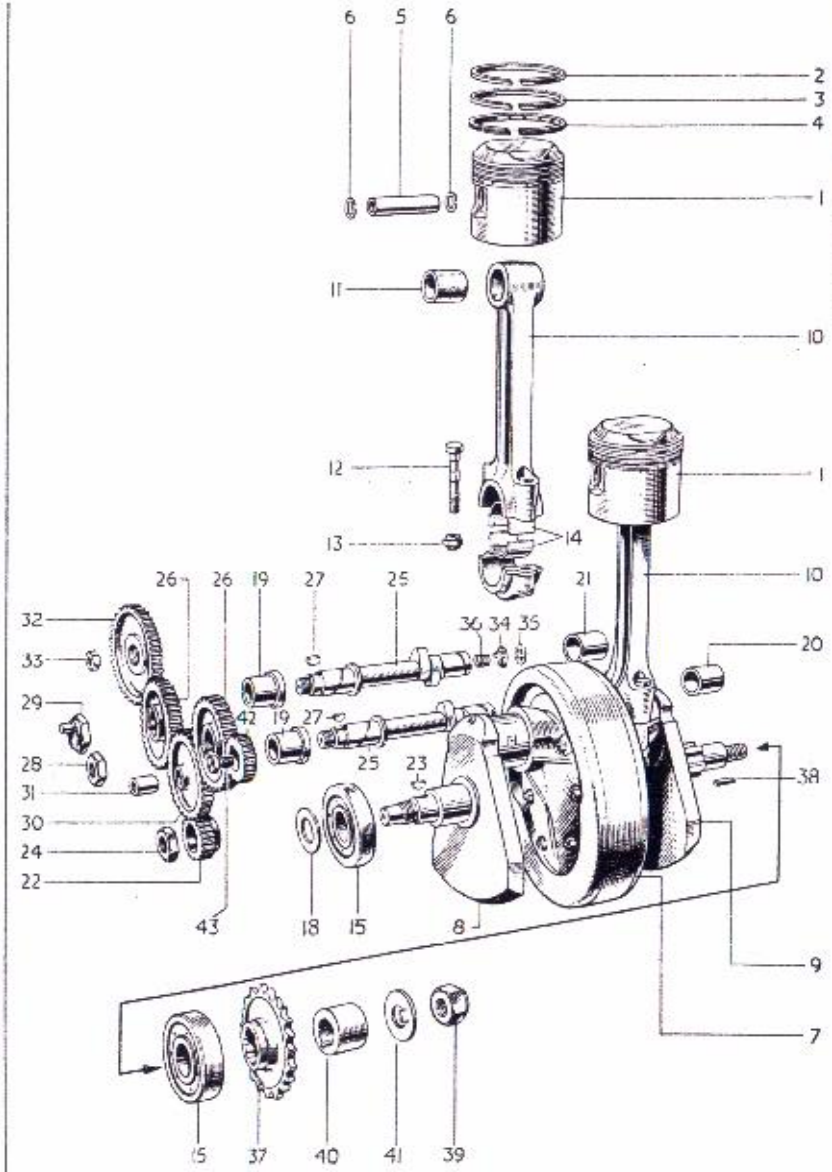

FIG. 9. CRANKSHAFT, CONNECTING RODS, PISTONS, TIMING GEARS, etc.

INDEX — FIG. 8

Illust. No.	Part No.	Page No.	Ref. No.	Illust. No.	Part No.	Page No.	Ref. No.	Illust. No.	Part No.	Page No.	Ref. No.

FIG. 8. CRANKCASE, CYLINDER BLOCK, CYLINDER HEAD, etc.

FIG. 9. CRANKSHAFT, CONNECTING RODS, PISTONS, TIMING GEARS, etc.

INDEX FIG. 8

Illust. No.	Part No.	Page No.	Ref. No.
1	E3332	19	2
	E3332/TR6	19	4
2	E2894	19	6
3	E3644	19	10
4	E3614	19	14
5	E327	19	16
6	E1484	19	17
7	E1596	19	18
8	E2973	21	4
9	E3310	21	16
	E2904	21	18
10	E2899	21	19
	E2900	21	20
11	E1488	21	21
12	E1487	21	22
13	E1543	21	23
14	E1544	21	24
15	WE259A	21	25
16	E2892/3282	23	8
17	E672	23	9
18	E3253	23	10
19	W76	23	11
20	PO172A	23	12
21	E1534A	23	15
22	E2022	23	18
23	F1008	23	19
24	E1539	23	22
25	S1-51	23	23
26	E1532	23	25
27	E1535	23	26
28	E1536	32	1
29	F879	32	2
30	E529	32	7
31	E487	32	8
32	E486	32	9
33	E1540	32	10
34	F879	32	12
35	GS35	32	27
36	GS153	32	28
37	E1476	32	29
38	E495	32	30
39	S70-7	32	31
40	E403	32	32
41	E2360	32	33
42	E1537	32	34
43	E2794	33	2
44	GS251	33	3
45	E2790	33	4
46	E1670	33	5
47	GS254	33	6
48	E2788	33	7
49	E2791	33	8
50	E2793	33	9
51	E2789	33	10
52	E2792	33	11
53	E2218/T110	33	16
	E2218/Trophy	33	14
54	E2615	33	24
55	E3437	33	26
56	E3439	33	27
57	E375	33	39
58	E3059	34	6
59	E1477	34	7
60	H200	34	9
61	E2620	34	12
62	E3646	34	14
63	E1496	34	15
64	E3547	34	16
65	E3550	34	18
66	E3551	34	20
67	E3552	34	22
68	E2980	34	24
69	F879	34	25
70	E1564	34	27
71	E1577	34	28
72	E1545	34	29
73	E1457	34	32
74	E1458	34	33
75	E1483	34	34
76	E1513	34	35
77	E470	34	36
78	E1330	35	1
79	E1575	35	2
80	E1574	35	3
81	E1512	35	4
82	E3253	35	5
83	E1435	35	6
84	E3583	19	12
90	S1-52	50	19
91	E3335	74	23
92	E1529	74	24
93	E3353	74	21
94	E2228	98	24
95	E3354	74	22

INDEX FIG. 9

Illust. No.	Part No.	Page No.	Ref. No.
1	CP163	21	36
2	E2897	22	7
3	E3049	22	10
4	E2898	22	17
5	WE203E	22	20
6	WE479	22	21
7	E3306	22	24
8	E3454	22	26
9	E3330	22	29
10	E3606	23	1
11	E1511	23	3
12	E2490A	23	4
13	E2922	23	5
14	E3586	23	2
15	E1591	32	13
18	E3300	32	19
19	E1479	32	15
20	E1516	32	16
21	E2260	32	17
22	E1472	33	28
23	E1580	33	29
24	E398	33	30
25	E3325	33	32
26	E1486A	33	33
27	E1558	33	34
28	E1492	33	35
29	E1463	33	36
30	E1471	33	37
31	E400	33	38
32	E2741	33	44
33	170104	33	45
34	E2254	34	1
35	GS87	34	2
36	E2256	34	3
37	E3108/24	35	20
38	E3115	35	27
39	E3120	35	29
40	E3384	35	30
41	E3119	35	32
42	E2451	98	21
43	111704	98	22

REF. No.	PART No.	DESCRIPTION	5T	6T	TR5	T100	T110	TR6
1	E1536	Stud, oil pump fixing 1 7/16" O/A	2	2	2	2	2	2
2	F879	Nut, oil pump fixing stud	2	2	2	2	2	2
3	E2312	Washer, oil pump fixing stud	2	2	2	2	2	2
4	E1508	Pipe, crankcase oil return	1	1	1	1	1	1
5	E1509	Clip, crankcase oil return pipe	1	1	1	1	1	1
6	E1645	Screw, crankcase oil return pipe 11/64" U/H ...	1	1	1	1	1	1
		CRANKCASE OIL FILTER						
7	E529	Filter, crankcase oil	1	1	1	1	1	1
8	E487	Washer, crankcase oil filter joint	2	2	2	2	2	2
9	E486	Cover, crankcase oil filter joint	1	1	1	1	1	1
10	E1540	Stud, crankcase oil filter joint 5/8" O/A ...	4	4	4	4	4	4
11	E1612	Washer, crankcase oil filter stud locking ...	4	4	4	4	4	4
12	F879	Nut, crankcase oil filter	4	4	4	4	4	4
		CRANKCASE BEARINGS						
13	E1591	Bearing, crankcase timing side (ball)	1	1	1	1	1	1
14	E1591	Bearing, crankcase driving side (ball) ...	1	1	1	1	1	1
15	E1479	Bush, timing side camshaft	2	2	2	2	2	2
16	E1516	Bush, driving side camshaft (exhaust)... ...	1	1	1	1	1	1
17	E2260	Bush, driving side camshaft (breather) ...	1	1	1	1	1	1
18	E2311	Pin, timing side camshaft (breather)	1	1	1	1	1	1
19	E3300	Clamping Washer, T/S bearing	1	1	1	1	1	1
		STUDS AND BOLTS FOR CRANKCASE HALVES						
20	E1555	Bolt, crankcase top rear	1	1	1	1	1	1
21	S25-3	Washer, crankcase top rear bolt	1	1	1	1	1	1
22	T456	Stud, crankcase bottom front 3 3/4" O/A ...	1	1	1	1	1	1
23	SI-51	Nut, crankcase bottom front stud	2	2	2	2	2	2
24	S25-3	Washer, crankcase bottom front stud ...	2	2	2	2	2	2
25	E1647	Screw, crankcase inside boss 1/4" U/H ...	2	2	2	2	2	2
		FOR ENGINE PLATE STUDS SEE PAGE 52.						
		OIL PUMP						
26	E3072	Pump, assembly, oil	1	1	1	1	1	1
27	GS35	Body, oil pump	1	1	1	1	1	1
28	GS153	Plunger, oil pump feed	1	1	1	1	1	1
29	E1476	Plunger, oil pump scavenge	1	1	1	1	1	1
30	E495	Block, oil pump slider	1	1	1	1	1	1
31	S70-7	Ball, oil pump valve	2	2	2	2	2	2
32	E403	Spring, oil pump valve	2	2	2	2	2	2
33	E2360	Plug, oil pump body	2	2	2	2	2	2
34	E1537	Washer, oil pump joint	1	1	1	1	1	1

REF. No.	PART No.	DESCRIPTION	5T	6T	TR5	T100	T110	TR6
		OIL RELEASE VALVE						
1	E2795	Valve, release and oil indicator	1	1	1	1	1	1
2	E2794	Body, release valve	1	1	1	1	1	1
3	GS251	Piston, release valve	1	1	1	1	1	1
4	E2790	Cap, release valve	1	1	1	1	1	1
5	E1670	Washer, release valve body	1	1	1	1	1	1
6	GS254	Washer, release valve cap	1	1	1	1	1	1
7	E2788	Spring, release valve main	1	1	1	1	1	1
8	E2791	Shaft, indicator button	1	1	1	1	1	1
9	E2793	Tube, indicator rubber	1	1	1	1	1	1
10	E2789	Spring, indicator auxiliary	1	1	1	1	1	1
11	E2792	Nut, indicator shaft	1	1	1	1	1	1
		TIMING COVER						
12	E3110/5T	Cover, timing gear	1	—	—	—	—	—
13	E3110/6T	Cover, timing gear	—	1	—	—	—	—
14	E2218/TROPHY	Cover, timing gear	—	—	1	—	—	1
15	E2218/T100	Cover, timing gear	—	—	—	1	—	—
16	E2218/T110	Cover, timing gear	—	—	—	—	1	—
17	E1595	Patent plate	1	—	—	—	—	—
18	E2909	Patent plate	—	1	—	—	—	—
19	E2876	Patent plate	—	—	1	—	—	1
20	E1678	Patent plate	—	—	—	1	—	—
21	E2910	Patent plate	—	—	—	—	1	—
22	D208-5	Rivet, patent plate	3	3	3	3	3	3
23	E378	Bush, timing gear cover	1	1	1	1	1	1
24	E2615	Plug, timing gear cover	1	1	1	1	1	1
25	E1335	Washer, timing gear cover plug	1	1	1	1	1	1
26	E3437	Screw, timing gear cover (short) $\frac{10}{16}$" U/H	7	7	7	7	7	7
27	E3439	Screw, timing gear cover (long) 1 $\frac{3}{16}$" U/H	3	3	3	3	3	3
		TIMING GEARS AND CAMSHAFTS						
28	E1472	Pinion, timing	1	1	1	1	1	1
29	E1580	Key, timing pinion	1	1	1	1	1	1
30	E398	Nut, timing pinion	1	1	1	1	1	1
31	E3275	Camshaft, inlet and exhaust	2	2	—	2	—	—
32	E3325	Camshaft, inlet and exhaust	—	—	2	—	2	2
33	E1486A	Wheel, inlet and exhaust camshaft	2	2	2	2	2	2
34	E1558	Key, camshaft wheel	2	2	2	2	2	2
35	E1492	Nut, camshaft wheel exhaust	1	1	1	1	1	1
36	E1463	Nut, camshaft wheel inlet (pump drive) ...	1	1	1	1	1	1
37	E1471	Wheel, intermediate gear	1	1	1	1	1	1
38	E400	Bush, intermediate gear wheel	1	1	1	1	1	1
39	E375	Spindle, intermediate gear wheel	1	1	1	1	1	1
40	E3123	Pinion, distributor	1	1	—	—	—	—
41	E3125	Pin, distributor pinion	1	1	—	—	—	—
42	E3126	Circlip, distributor pinion	1	1	—	—	—	—
43	146460	Washer, distributor pinion (brass)	1	1	—	—	—	—
44	E2741	Gear, Magneto (fixed)	—	—	1	1	1	1
45	170104	Nut, Magneto gear $\frac{3}{8}$" std.	—	—	1	1	1	1
46	E1330	Washer, Magneto gear $\frac{3}{8}$" std.	—	—	1	1	1	1

REF. No.	PART No.	DESCRIPTION	5T	6T	TR5	T100	T110	TR6
		CRANKCASE BREATHER						
1	E2254	Valve, crankcase rotary	1	1	1	1	1	1
2	GS87	Disc, crankcase rotary valve	1	1	1	1	1	1
3	E2256	Spring, crankcase rotary valve	1	1	1	1	1	1
4	E2724	Pipe, crankcase breather	1	1	1	1	1	1
5	E3078	Extension, crankcase breather pipe (rubber)	1	1	1	1	1	1
		TAPPETS AND TAPPET BLOCKS						
6	E3059	Tappet	4	4	4	4	4	4
7	E1477	Block, tappet guide	2	2	—	—	2	2
8	GS36	Block, tappet guide	—	—	2	2	—	—
9	H200	Screw, tappet guide block lock $\frac{7}{16}$" U/H ...	2	2	2	2	2	2
10	E2312	Washer, tappet guide block lock	2	2	2	2	2	2
		PUSH RODS						
11	E1693	Rod, push	4	4	—	—	—	—
12	E2620	Rod, push	—	—	4	4	4	4
		PUSH ROD COVER TUBE						
13	E1505	Tube, push rod cover	2	2	2	2	—	—
14	E3646	Tube, push rod cover	—	—	—	—	2	2
15	E1496	Washer, push rod cover lower seal	2	2	2	2	2	2
16	E3547	Washer, push rod cover upper seal	2	2	2	2	2	2
		OVERHEAD ROCKER GEAR						
17	E1461T	Box, inlet rocker	1	1	1	1	—	—
18	E3550	Box, inlet rocker	—	—	—	—	1	1
19	E1462T	Box, exhaust rocker	1	1	1	1	—	—
20	E3551	Box, exhaust rocker	—	—	—	—	1	1
21	E1650	Gasket, rocker box joint	4	4	4	4	—	—
22	E3552	Gasket, rocker box joint	—	—	—	—	2	2
23	E1540	Stud, rocker box to cylinder head $\frac{5}{16}$" O/A	4	4	—	—	—	—
24	E2980	Stud, rocker box to cylinder head $\frac{3}{8}$" O/A	—	—	4	4	6	6
25	F879	Nut, rocker box to cylinder head	4	4	4	4	6	6
26	E3302	Washer, rocker box to cylinder head nut ...	—	—	4	4	6	6
27	E1564	Cap, rocker box inspection	4	4	4	4	4	4
28	E1577	Washer, rocker box inspection cap	4	4	4	4	4	4
29	E1545	Bolt, rocker box to cylinder head 2" U/H	4	4	—	—	4	4
30	E2982	Bolt, rocker box to cylinder head 2 $\frac{5}{16}$" U/H	—	—	4	4	—	—
31	S25-13	Washer, rocker box to cylinder head ...	4	4	4	4	4	4
32	E1457	Rocker, valve R.H.	2	2	2	2	2	2
33	E1458	Rocker, valve L.H.	2	2	2	2	2	2
34	E1483	Ball pin, valve rocker	4	4	4	4	4	4
35	E1513	Adjusting pin, valve rocker	4	4	4	4	4	4
36	E470	Locknut, adjusting pin	4	4	4	4	4	4

ENGINE — GROUP 2
GASKET SET — GROUP 3

REF. No.	PART No.	DESCRIPTION	5T	6T	TR5	T100	T110	TR6
1	E1300	Washer, valve rocker thrust $\frac{3}{8}$"	2	2	2	2	2	2
2	E1575	Washer, valve rocker thrust $\frac{1}{2}$"	6	6	6	6	6	6
3	E1574	Washer, valve rocker spring	4	4	4	4	4	4
4	E1512	Spindle, valve rocker	2	2	2	2	2	2
5	E3253	Sealing ring, rocker spindle (rubber)	2	2	2	2	2	2
6	E1435	Nut, valve rocker spindle (dome)	2	2	2	2	2	2
7	E1335	Washer, valve rocker spindle (copper)	4	4	4	4	4	4
		ROCKER OIL FEED AND DRAIN PIPES						
8	E3082	Pipe, rocker oil feed	1	1	1	1	1	1
9	E3383	Connection feed pipe (rubber)	1	1	1	1	1	1
10	GS272	Pipe, rocker oil drain inlet	1	1	1	1	—	—
11	GS273	Pipe, rocker oil drain exhaust	1	1	1	1	—	—
12	E1601	Adaptor, drain pipe to cylinder head	4	4	—	—	—	—
13	E2767	Adaptor, drain pipe to cylinder head	—	—	4	4	—	—
14	E1335	Washer, drain pipe to cylinder head	8	8	8	8	—	—
15	E984	Adaptor, drain pipe to cover tube	2	2	2	2	—	—
16	F1880	Washer, drain pipe to cover tube	4	4	4	4	—	—
		ENGINE SPROCKET						
17	E3108/19	Sprocket, engine 19T sidecar	1	—	—	1	—	—
18	E3108/22	Sprocket, engine 22T solo	1	—	—	1	—	—
19	E3108/21	Sprocket, engine 21T sidecar	—	1	—	—	1	1
20	E3108/24	Sprocket, engine 24T solo	—	1	—	—	1	1
21	E3108/21	Sprocket, engine 21T solo	—	—	1	—	—	—
22	E3108/17	Sprocket, engine 17T	As required					
23	E3108/18	Sprocket, engine 18T						
24	E3108/20	Sprocket, engine 20T						
25	E3108/23	Sprocket, engine 23T						
26	E3108/25	Sprocket, engine 25T						
27	E3115	Key, Rotor	1	1	1	1	1	1
28	E3435	Nut, sprocket and rotor	1	1	—	—	—	—
29	E3120	Nut, engine sprocket	—	—	1	1	1	1
30	E3384	Distance Piece, D/S crankshaft	—	—	1	1	1	1
31	E3116	Clamping washer, sprocket and rotor	1	1	—	—	—	—
32	E3119	Tab washer, engine sprocket nut	—	—	1	1	1	1

For 5T and 6T Alternator and locking washer see Page 104.

GASKET SET—GROUP 3

33	GS/5T/56	Gasket set	1	—	—	—	—	—
34	GS/6T/56	Gasket set	—	1	—	—	—	—
35	GS/T100/56	Gasket set	—	—	1	1	—	—
36	GS/T110/56	Gasket set	—	—	—	—	1	1

GEARBOX—GROUP 4

REF. No.	PART No.	DESCRIPTION	5T	6T	TR5	T100	T110	TR6
1	T1328	Gearbox complete less clutch—standard ratio	1	1	—	1	1	—
2	T1331	Gearbox complete less clutch—standard ratio	—	—	1	—	—	1
3	T1329	Gearbox complete less clutch—close ratio ...	A	A	—	A	A	—
4	T1332	Gearbox complete less clutch—close ratio ...	—	—	A	—	—	A
5	T1330	Gearbox complete less clutch—wide ratio ...	A	A	—	A	A	—
6	T1333	Gearbox complete less clutch—wide ratio ...	—	—	A	—	—	A
		GEARBOX CASING						
7	T1201	Casing, with bushes, gearbox	1	1	1	1	1	1
8	T989	Dowel, casing to inner cover	2	2	2	2	2	2
9	E698	Stud, casing to outer cover 2⅞" O/A ...	2	2	2	2	2	2
10	SI-51	Nut, casing stud	2	2	2	2	2	2
11	S25-3	Washer, casing stud	2	2	2	2	2	2
12	T935	Cover, with bushes, gearbox outer	1	1	1	1	1	1
13	E3442	Screw, outer cover to casing (long) ... 3" U/H	1	1	1	1	1	1
14	E3438	Screw, outer cover to casing ... ... 2⅜" U/H	1	1	1	1	1	1
15	E3437	Screw, outer cover to inner cover ... 1⅜" U/H	2	2	2	2	2	2
16	E3439	Screw, outer cover to inner cover (long) 1⅝" U/H	1	1	1	1	1	1
17	T1217	Cover with bushes, gearbox inner ...	1	1	1	1	1	1
18	T323A	Stud, inner cover to outer cover ... 1⅛" O/A	1	1	1	1	1	1
19	SI-51	Nut, inner cover to outer cover stud ...	1	1	1	1	1	1
20	S25-3	Washer, inner cover to outer cover stud ...	1	1	1	1	1	1
21	E3436	Screw, inner cover to casing (long) ... 1½" U/H	1	1	1	1	1	1
22	E3437	Screw, inner cover to casing ... ... 1⅜" U/H	3	3	3	3	3	3
23	T45	Stop, kickstarter quadrant	1	1	1	1	1	1
24	E1564	Cap, gearbox oil filler	1	1	1	1	1	1
25	E1577	Washer, gear box oil filler joint	1	1	1	1	1	1
26	S46-15	Plug, gearbox drain and cover level	2	2	2	2	2	2
27	PT104B	Washer, gearbox drain and cover level ...	2	2	2	2	2	2
		GEARBOX FITTINGS						
28	F3769	Stud, gearbox clamp 4⅛" O/A	1	1	1	1	1	1
29	F3770	Washer, T.S. gearbox clamp stud	1	1	1	1	1	1
30	F3771	Nut, D.S. gearbox clamp stud	1	1	1	1	1	1
31	F3772	Nut, T.S. gearbox clamp stud	1	1	1	1	1	1

REF. No.	PART No.	DESCRIPTION	5T	6T	TR5	T100	T110	TR6
		GEARBOX FITTINGS—*continued*						
1	F3575	Bolt, gearbox pivot 7" U/H	1	1	1	1	1	1
2	DS47	Nut, gearbox pivot bolt	1	1	1	1	1	1
3	PCW73A	Washer, gearbox pivot bolt	1	1	1	1	1	1
4	F3768	Eyebolt, gearbox adjuster	1	1	1	1	1	1
5	GS203	Washer, eyebolt nut	2	2	2	2	2	2
6	SI-51	Nut, gearbox eyebolt	2	2	2	2	2	2
7	F3767	Pivot pin, gearbox adjuster	1	1	1	1	1	1
8	S26-1	Washer, pivot pin	1	1	1	1	1	1
9	PO172A	Nut, pivot pin	1	1	1	1	1	1
		SHAFTS AND GEARS (STANDARD RATIO)						
		(See page 43 for wide and close ratio gears)						
10	T914	Mainshaft and low gear (16T)	1	1	1	1	1	1
11	PT108B	Bush, mainshaft for clutch rod	1	1	1	1	1	1
12	S66-1	Woodruff key No. 6	1	1	1	1	1	1
13	T1047	Nut, clutch to mainshaft	1	1	1	1	1	1
14	T1045	Washer, clutch to mainshaft, plain ...	1	1	1	1	1	1
15	T1046	Washer, clutch to mainshaft, lock	1	1	1	1	1	1
16	T1382	Gear, mainshaft high (26T)	1	1	1	1	1	1
17	T1370	Bush, mainshaft high gear	1	1	1	1	1	1
18	T917	Gear, mainshaft 3rd (24T)	1	1	1	1	1	1
19	T916	Gear, mainshaft 2nd (20T)	1	1	1	1	1	1
20	T1063	Layshaft c/w high gear (20T) and speedometer gear	1	1	1	1	1	1
21	T930	Gear, layshaft 3rd (22T)	1	1	1	1	1	1
22	T1065	Gear, layshaft 2nd (26T)	1	1	1	1	1	1
23	T926	Gear, layshaft low (30T)	1	1	1	1	1	1
24	T928	Bush, layshaft low gear	1	1	1	1	1	1
		For speedometer drive gears see page 108.						
		GEARBOX CASING BEARINGS						
25	T448	Bearing, high gear	1	1	1	1	1	1
26	T946	Oil seal, high gear bearing	1	1	1	1	1	1
27	E489	Circlip, high gear bearing retaining	1	1	1	1	1	1
28	S35-7	Bearing, mainshaft	1	1	1	1	1	1
29	T280	Circlip, mainshaft bearing	1	1	1	1	1	1
30	T1367	Bush, layshaft casing and inner cover	2	2	2	2	2	2
31	T912	Peg, layshaft bush	2	2	2	2	2	2
32	T981	Disc, layshaft bush	1	1	1	1	1	1

GEARBOX

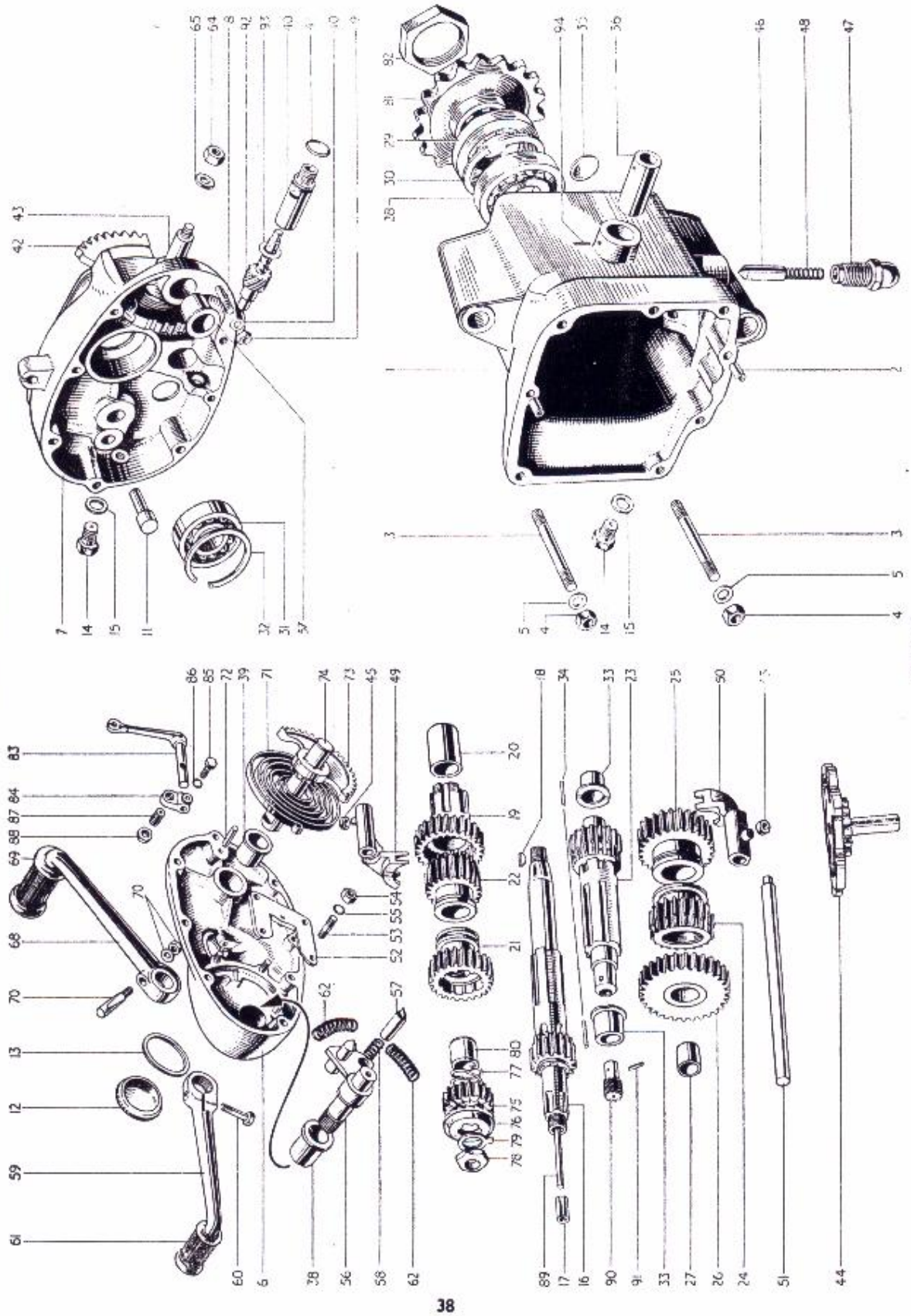

FIG. 10

INDEX FIG. 10

Illust. No.	Part No.	Page No.	Ref. No.	Illust. No.	Part No.	Page No.	Ref. No.	Illust. No.	Part No.	Page No.	Ref. No.
1	T1201	36	7	32	T280	37	29	64	T224	40	30
2	T989	36	8	33	T1367	37	30	65	S25-3	40	31
3	E698	36	9	34	T912	37	31	68	T451	40	32
4	S1-51	36	10	35	T981	37	32		T1270	40	33
5	S25-3	36	11	36	T341	40	1	69	F1814	40	39
6	T935	36	12	37	T412	40	3	70	T1222	41	1
7	T1217	36	17	38	T57	40	4	71	T31	41	2
8	T323A	36	18	39	T23	40	5	72	T47	41	3
9	S1-51	36	19	40	T933	40	6	73	T25A	41	4
10	S25-3	36	20	41	T948	40	7	74	T24A	41	5
11	T45	36	23	42	T397	40	8	75	T730	41	6
12	E1564	36	24	43	T399	40	9	76	T731	41	7
13	E1577	36	25	44	T500	40	10	77	T1250	41	9
14	S46-15	36	26	45	NT261	40	11	78	NT297	41	10
15	PT104B	36	27	46	T44	40	12	79	T732	41	11
16	T914	37	10	47	T372	40	13	80	T1338	41	8
17	PT108B	37	11	48	T373	40	14	81	T471A	41	12
18	S66-1	37	12	49	T260B	40	15	82	T440	41	13
19	T918	37	16	50	T913	40	16	83	T487	42	1
20	T920	37	17	51	T291	40	17	84	T402	42	3
21	T917	37	18	52	T407	40	18	85	T401	42	4
22	T916	37	19	53	T454	40	19	86	E2312	42	5
23	T1063	37	20	54	F879	40	20	87	T413	42	6
24	T930	37	21	55	E2312	40	21	88	T453	42	7
25	T1065	37	22	56	T408/9	40	22	89	T455	42	8
26	T926	37	23	57	T406	40	23		T455B	42	9
27	T928	37	24	58	T405	40	24	90	T924	108	1
28	T448	37	25	59	T1194	40	25	91	T925	108	3
29	T946	37	26	60	W932	40	27	92	T934	108	4
30	E489	37	27	61	T449	40	28	93	T825	108	6
31	S35-7	37	28	62	T404	40	29				

GROUP 4 — GEARBOX

REF. No.	PART No.	DESCRIPTION	5T	6T	TR5	T100	T110	TR6
1	T341	Bush, gear selector camplate	1	1	1	1	1	1
2	E3449	Peg, gear selector camplate bush	1	1	1	1	1	1
3	T412	Bush, footchange spindle inner	1	1	1	1	1	1
4	T57	Bush, footchange spindle outer	1	1	1	1	1	1
5	T23	Bush, kickstarter outer	1	1	1	1	1	1
6	T933	Bush, speedo gear inner cover	1	1	1	1	1	1
7	T948	Washer, speedo gear inner cover sealing ...	1	1	1	1	1	1
		GEAR CONTROL (SELECTOR MECHANISM)						
8	T397	Quadrant, gear operating	1	1	1	1	1	1
9	T399	Spindle, gear operating quadrant	1	1	1	1	1	1
		Split pin $1\frac{1}{2}'' \times \frac{5}{64}''$ dia....	1	1	1	1	1	1
10	T500	Camplate, gear control	1	1	1	1	1	1
11	NT261	Roller, gear control camplate	2	2	2	2	2	2
12	T44	Plunger, gear control camplate	1	1	1	1	1	1
13	T372	Bush, gear control camplate plunger ...	1	1	1	1	1	1
14	T373	Spring, gear control camplate plunger ...	1	1	1	1	1	1
15	T260B	Fork, gear selector mainshaft	1	1	1	1	1	1
16	T913	Fork, gear selector layshaft	1	1	1	1	1	1
17	T291	Rod, gear selector fork	1	1	1	1	1	1
		GEAR CONTROL (ENCLOSED FOOTCHANGE)						
18	T407	Plate, footchange guide	1	1	1	1	1	1
19	T454	Stud, footchange guide plate $\frac{3}{8}''$ O/A ...	4	4	4	4	4	4
20	F879	Nut, footchange guide plate stud	4	4	4	4	4	4
21	E2312	Washer, footchange guide plate stud	4	4	4	4	4	4
22	T408/9	Plunger assembly, gear quadrant	1	1	1	1	1	1
23	T406	Plunger, gear quadrant	2	2	2	2	2	2
24	T405	Spring, gear quadrant plunger	2	2	2	2	2	2
25	T1194	Pedal, footchange	1	1	1	1	1	1
26	T997	Pedal, footchange (Heel and Toe) (Alternative equipment)	A	A	A	A	A	A
27	W932	Set screw, footchange pedal 1" U/H ...	1	1	1	1	1	1
28	T449	Rubber, footchange pedal	1	1	1	1	1	1
29	T404	Spring, footchange pedal return	2	2	2	2	2	2
30	T224	Nut, gear quadrant spindle	1	1	1	1	1	1
31	S25-3	Washer, gear quadrant spindle	1	1	1	1	1	1
		KICKSTARTER						
32	T451	Crank, kickstarter (rigid)	1	1	—	1	1	—
33	*T1270	Crank, kickstarter (folding) complete ...	A	A	1	A	A	1
34	T1271	Lever, kickstarter	A	A	1	A	A	1
35	T1272	Pedal, kickstarter	A	A	1	A	A	1
36	T1273	Bolt, lever to pedal 1.155" U/H	A	A	1	A	A	1
37	S70-3	Ball, pedal locating	A	A	1	A	A	1
38	T1167	Spring, pedal locating ball	A	A	1	A	A	1
39	F1814	Rubber, kickstarter pedal	1	1	1	1	1	1

* *Fitted to T100 and T110 machines for export to U.S.A.*

REF. No.	PART No.	DESCRIPTION	5T	6T	TR5	T100	T110	TR6
1	T1222	Cotter pin c/w nut and washer	1	1	1	1	1	1
2	T31	Spring, k/s crank return	1	1	1	1	1	1
3	T47	Peg, k/s anchor	1	1	1	1	1	1
4	T25A	Quadrant, kickstarter	1	1	1	1	1	1
5	T24A	Shaft, kickstarter axle	1	1	1	1	1	1
6	T730	Pinion, kickstarter	1	1	1	1	1	1
7	T731	Ratchet, kickstarter	1	1	1	1	1	1
8	T1338	Sleeve, kickstarter pinion	1	1	1	1	1	1
9	T1250	Spring, kickstarter pinion	1	1	1	1	1	1
10	NT297	Nut, kickstarter ratchet	1	1	1	1	1	1
11	T732	Washer, kickstarter lock	1	1	1	1	1	1
		GEARBOX SPROCKET						
12	T471A	Sprocket, gearbox	1	1	1	1	1	1
13	T440	Nut, gearbox sprocket locking	1	1	1	1	1	1
		CLUTCH AND SHOCK ABSORBER						
14	T1360	Clutch assembly	1	—	—	—	—	—
15	T1361	Clutch assembly	—	1	1	1	1	1
16	T940	Housing clutch sprocket	1	—	—	—	—	—
17	T985	Housing clutch sprocket	—	1	1	1	1	1
18	T1037	Centre clutch	1	—	—	—	—	—
19	T1038	Centre clutch	—	1	1	1	1	1
20	T1039	Plate, inner retaining shock absorber	1	1	1	1	1	1
21	T1040	Screw, inner retaining shock absorber 0.417" U/H	4	4	4	4	4	4
			1	1	1	1	1	1
22	T1041	Spider, clutch shock absorber	4	4	4	4	4	4
23	T1472	Rubber insert, clutch shock absorber (drive)	4	4	4	4	4	4
24	T1473	Rubber insert, clutch shock absorber (rebound)	1	1	1	1	1	1
25	T1044	Plate, outer retaining shock absorber						
26	T1040	Screw, outer retaining shock absorber 0.417" U/H	4	4	4	4	4	4
27	T418	Hub, clutch	1	1	1	1	1	1
28	T394	Roller, clutch housing to hub	20	20	20	20	20	20
29	T1362	Plate, clutch driving (bonded)	4	5	5	5	5	5
30	T1363	Plate, clutch driven (plain)	5	6	6	6	6	6
31	T429	Spring, clutch pressure	4	—	—	—	—	—
32	T999	Spring, clutch pressure	—	4	4	4	4	4
33	T423	Pin, clutch pressure spring $1\frac{19}{32}$" U/H	4	—	—	—	—	—
34	T423A	Pin, clutch pressure spring $1\frac{27}{32}$" U/H	—	4	4	4	4	4
35	T427	Nut, clutch pressure spring pin	4	4	4	4	4	4
36	T425	Cup, clutch pressure spring	4	—	—	—	—	—
37	T998	Cup, clutch pressure spring	—	4	4	4	4	4
38	T986	Plate, clutch pressure c/w button	1	1	1	1	1	1
39	T422	Button, clutch pressure plate	1	1	1	1	1	1

REF. No.	PART No.	DESCRIPTION	5T	6T	TR5	T100	T110	TR6
		CLUTCH CONTROL						
1	T487	Lever, clutch operating	1	1	1	1	1	1
2	T495	Cap, clutch operating lever rubber	1	1	1	1	1	1
3	T402	Arm, clutch operating lever	1	1	1	1	1	1
4	T401	Peg, clutch operating lever	1	1	1	1	1	1
5	E2312	Washer, clutch operating lever peg	1	1	1	1	1	1
6	T413	Pin, clutch lever adjusting	1	1	1	1	1	1
7	T453	Nut, clutch lever adjusting lock	1	1	1	1	1	1
8	T455	Rod, clutch operating	1	—	—	—	—	—
9	T455B	Rod, clutch operating	—	1	1	1	1	1

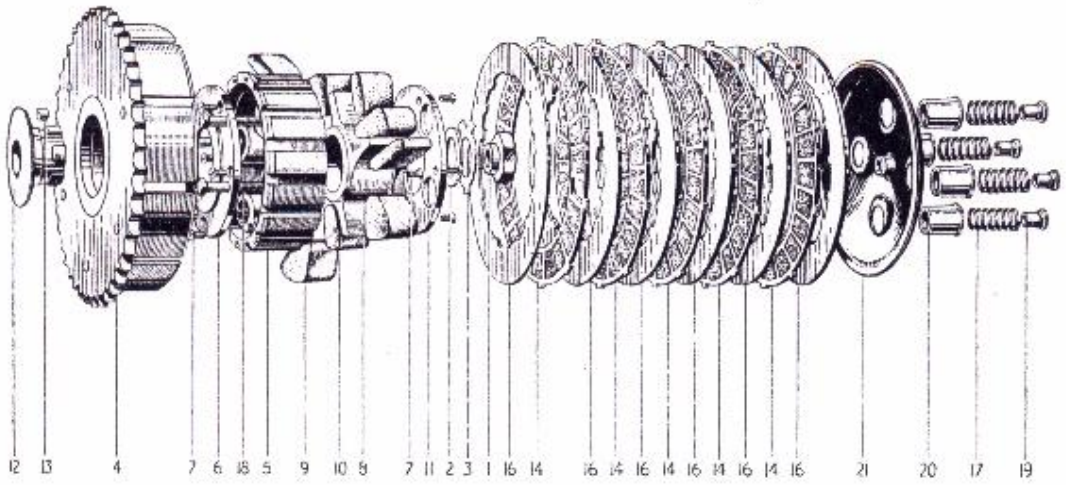

FIG. 11. CLUTCH AND SHOCK ABSORBER

INDEX FIG. 11

Illust. No.	*Part No.*	*Page No.*	*Ref. No.*	*Illust. No.*	*Part No.*	*Page No.*	*Ref. No.*
1	T1047	37	13	12	T418	41	27
2	T1045	37	14	13	T394	41	28
3	T1046	37	15	14	T1362	41	29
4	T940	41	16	16	T1363	41	30
	T985	41	17	17	T429	41	31
5	T1037	41	18		T999	41	32
	T1038	41	19	18	T423	41	33
6	T1039	41	20		T423A	41	34
7	T1040	41	21	19	T427	41	35
8	T1041	41	22	20	T425	41	36
9	T1472	41	23		T998	41	37
10	T1473	41	24	21	T986	41	38
11	T1044	41	25				

WIDE RATIO GEARS—GROUP 5

To convert from standard to wide ratio

REF. No.	PART No.	DESCRIPTION	5T	6T	TR5	T100	T110	TR6
1	T1384	Gear, mainshaft high 28T	I	I	I	I	I	I
2	T968	Gear, mainshaft 2nd 19T	I	I	I	I	I	I
3	T971	Gear, layshaft high 18 T c/w speedo gear ...	I	I	I	I	I	I
4	T974	Gear, layshaft 2nd 27T	I	I	I	I	I	I
5	T975	Gear, speedometer drive	I	I	I	I	I	I

STANDARD RATIO GEARS—GROUP 6

To convert from wide to standard ratio

6	T1382	Gear, mainshaft high 26T	I	I	I	I	I	I
7	T916	Gear, mainshaft 2nd 20T	I	I	I	I	I	I
8	T1063	Gear, layshaft high 20T c/w speedo gear ...	I	I	I	I	I	I
9	T1065	Gear, layshaft 2nd 26T	I	I	I	I	I	I
10	T934	Gear, speedometer drive	I	I	I	I	I	I

CLOSE RATIO GEARS—GROUP 7

11	T1177	Mainshaft and low gear 18T	I	I	I	I	I	I
12	PT108B	Bush, mainshaft for clutch rod	I	I	I	I	I	I
13	T1383	Gear, mainshaft high 24T	I	I	I	I	I	I
14	T955	Gear, mainshaft 2nd 21T	I	I	I	I	I	I
15	T1179	Gear, mainshaft 3rd 23T	I	I	I	I	I	I
16	T920	Bush, mainshaft high gear	I	I	I	I	I	I
17	T959	Layshaft and high gear 22T	I	I	I	I	I	I
18	T961	Gear, layshaft low 28T	I	I	I	I	I	I
19	T963	Gear, layshaft 2nd 25T	I	I	I	I	I	I
20	T964	Gear layshaft 3rd 23T	I	I	I	I	I	I
21	T928	Bush, layshaft low gear	I	I	I	I	I	I
22	T983	Plug, speedometer drive sealing	I	I	I	I	I	I
23	T948	Washer, speedometer drive plug	I	I	I	I	I	I

Gear Ratios. Suitable ratios can be selected from the three groups which will enable the rider to operate his machine for normal road work or sporting events. To vary the ratios of any group, engine sprockets ranging from 17 to 25 teeth are available.

On the page opposite there will be found a R.P.M. and Gear Ratio Chart, which will assist the rider in making his selection.

ENGINE REVOLUTIONS PER MINUTE

M.P.H. / GEAR RATIO	4.4	4.57	4.78	5.0	5.24	5.5	5.7	5.8	6.0	6.25	6.5	6.9	7.06	7.14	7.5	8.0	8.85	9.8	10.6	11.58	12.2	13.9	14.3	15.25	16.0	17.8	18.85
20	1144	1188	1244	1300	1364	1428	1480	1508	1560	1624	1688	1796	1836	1856	1948	2080	2300	2548	2756	3012	3172	3612	3720	3964	4160	4628	4900
25	1430	1485	1555	1625	1705	1785	1850	1885	1950	2030	2110	2245	2295	2320	2435	2600	2875	3185	3445	3765	3965	4515	4650	4955	5200	5785	6125
30	1716	1782	1866	1950	2046	2142	2220	2262	2340	2435	2532	2694	2754	2784	2922	3120	3450	3822	4134	4518	4758	5418	5585	5946	6240	6942	—
35	2002	2079	2177	2275	2387	2499	2590	2639	2730	2842	2954	3143	3213	3248	3409	3640	4025	4459	4823	5271	5551	6321	6510	6937	—	—	
40	2288	2376	2488	2600	2728	2856	2960	3016	3120	3248	3376	3592	3672	3712	3896	4160	4600	5096	5512	6024	6344						
45	2574	2673	2799	2925	3069	3213	3330	3393	3510	3554	3798	4041	4131	4176	4383	4680	5175	5733	6201	6777	7137						
50	2860	2970	3110	3250	3410	3570	3700	3770	3900	4060	4220	4490	4590	4640	4870	5200	5750	6370	6890								
55	3146	3267	3421	3575	3751	3927	4070	4147	4290	4466	4642	4939	5049	5104	5357	5720	6325	7007									
60	3432	3564	3732	3900	4092	4284	4440	4524	4680	4872	5064	5388	5508	5568	5844	6240	6900										
70	4004	4158	4354	4550	4774	4998	5180	5278	5460	5684	5908	6286	6426	6496	6331	6760											
80	4576	4752	4976	5200	5456	5712	5920	6032	6240	6496	6752	7184	7344	7424													
90	5148	5346	5598	5850	6138	6426	6660	6786	7020	7308																	
100	5720	5940	6220	6500	6820	7140	7400	7540																			
110	6292	6534	6842	7150	7502	7854																					

NOTE.—Engine R-P-M are calculated in conjunction with 3.50 × 19 Rear tyre equipment—780 R-P-Mile—and will deviate slighcly from above figures for models not so equipped.

4.00 × 18 Rear Tyre 785 R-P-Mile. 3.25 × 19 Rear Tyre 793 R-P-Mile. 4.00 × 19 Rear Tyre 756 R-P-Mile.

GEAR RATIOS

GEARS	STANDARD RATIO				WIDE RATIO				CLOSE RATIO			
Engine Sprocket	Top	3rd	2nd	1st	Top	3rd	2nd	1st	Top	3rd	2nd	1st
17	6.46	7.7	10.94	15.8	6.46	9.22	14.30	18.85	6.46	7.06	8.42	11.00
18	6.10	7.28	10.32	14.9	6.10	8.70	13.50	17.80	6.10	6.66	7.95	10.40
19	5.80	6.9	9.8	14.15	5.80	8.25	12.80	16.85	5.80	6.32	7.54	9.84
20	5.50	6.55	9.3	13.4	5.50	7.84	12.18	16.0	5.50	6.00	7.15	9.35
21	5.24	6.24	8.85	12.8	5.24	7.46	11.58	15.25	5.24	5.72	6.81	8.90
22	5.00	5.95	8.45	12.2	5.00	7.13	11.05	14.55	5.00	5.45	6.50	8.50
23	4.78	5.69	8.09	11.69	4.78	6.82	10.60	13.90	4.78	5.23	6.23	8.12
24	4.57	5.45	7.75	11.2	4.57	6.54	10.14	13.35	4.57	5.00	5.96	7.78
25	4.40	5.24	7.45	10.75	4.40	6.26	9.73	12.80	4.40	4.80	5.73	7.46
Gearbox Reduction	1.0	1.19	1.69	2.44	1.00	1.425	2.21	2.915	1.00	1.09	1.30	1.695

EXHAUST SYSTEM—GROUP 8

EXHAUST PIPES

REF. No.	PART No.	DESCRIPTION	5T	6T	TR5	T100	T110	TR6
1	E3426	Pipe, exhaust L.H.	1	1	—	—	—	—
2	E3462	Pipe, exhaust L.H.	—	—	1	—	—	—
3	E3346	Pipe, exhaust L.H.	—	—	—	1	—	—
4	E3347	Pipe, exhaust L.H.	—	—	—	—	1	—
5	E3472	Pipe, exhaust L.H.	—	—	—	—	—	1
6	E3350	Pipe, exhaust R.H.	1	1	—	—	1	—
7	E3463	Pipe, exhaust R.H.	—	—	1	—	—	—
8	E3349	Pipe, exhaust R.H.	—	—	—	1	—	—
9	E3473	Pipe, exhaust R.H.	—	—	—	—	—	1
10	E1269	Clip, exhaust to cylinder head	2	2	2	2	2	2
11	E3469	Clip, exhaust to extension pipe	—	—	1	—	—	1
12	E409	Bolt, exhaust clip 1 3/16" U/H	2	2	2	2	2	2
13	E410A	Washer, exhaust clip bolt	2	2	2	2	2	2
14	TE164E	Bolt, exhaust clip 1 3/16" U/H	—	—	1	—	—	1
15	TE164C	Nut, exhaust clip bolt (D shape)	—	—	1	—	—	1
16	TE164D	Washer, exhaust clip bolt (D shape)	—	—	1	—	—	1
17	E2989	Bracket, exhaust pipe to engine plate (L.H.)	1	1	—	1	1	—
18	E2990	Bracket, exhaust pipe to engine plate (R.H.)	1	1	—	1	1	—
19	DS57	Bolt, exhaust pipe to bracket 7/16" U/H ...	2	2	—	2	2	—
20	S26-2	Washer, exhaust pipe to bracket bolt ...	2	2	1	2	2	1
21	F879	Nut, exhaust pipe to bracket bolt	2	2	1	2	2	1
22	F1369	Bolt, exhaust pipe clip 5/8" U/H	—	—	1	—	—	1
23	F1699	Clip, pipe to backstay	—	—	1	—	—	1

SILENCER

24	E3651	Silencer, L.H.	1	1	—	1	1	—
25	E3652	Silencer, R.H.	1	1	—	1	1	—
26	E3470	Silencer	—	—	1	—	—	1
27	DS55	Bolt, silencer hanger 1 5/16" U/H	2	2	—	2	2	—
28	F1213	Bolt, silencer hanger 11/16" U/H	—	—	1	—	—	1
29	SI-51	Nut, silencer hanger bolt	2	2	1	2	2	1
30	S25-3	Washer, silencer hanger bolt nut	2	2	1	2	2	1
31	E3767	Clip, silencer to exhaust pipe	2	2	—	2	2	—
32	E3469	Clip, silencer to exhaust pipe	—	—	1	—	—	1
33	TE164E	Bolt, silencer to exhaust pipe clip 1 3/16" U/H	—	—	1	—	—	1
34	TE164C	Nut, silencer to exhaust pipe clip	—	—	1	—	—	1
35	TE164D	Washer, silencer to exhaust pipe clip ...	—	—	1	—	—	1
36	F3430	Bolt, silencer to exhaust pipe clip 5/8" U/H	2	2	—	2	2	—
37	E3768	Washer, clip bolt nut (D shape)	4	4	—	4	4	—
38	E1310	Nut, clip bolt	2	2	—	2	2	—
39	F4141	Stay, clip bolt to frame	2	2	—	2	2	—

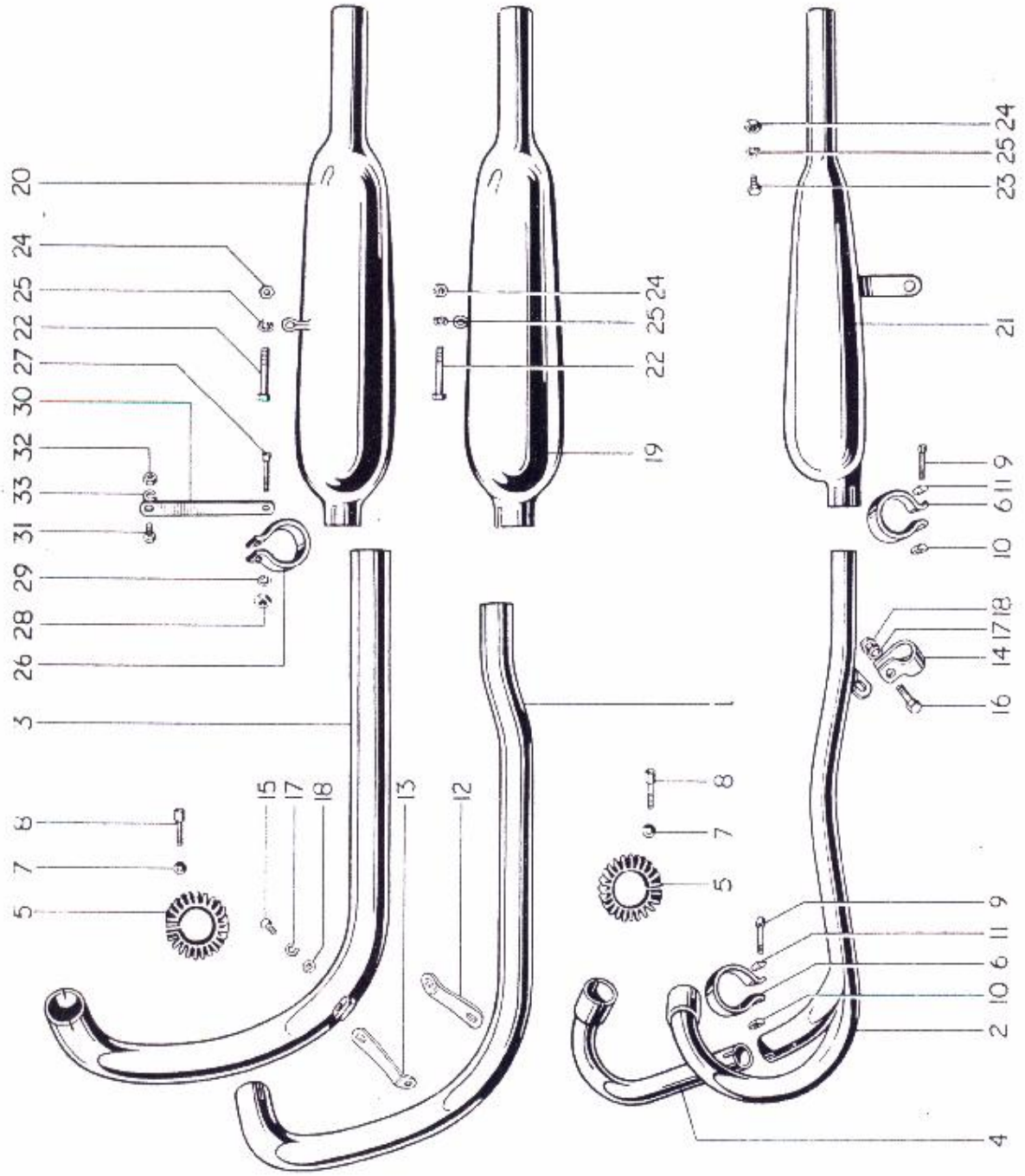

FIG. 12. EXHAUST PIPES AND SILENCERS

REF. No.	PART No.	DESCRIPTION	5T	6T	TR5	T100	T110	TR6
1	F3641	Stud, stay to frame $\frac{11}{16}$" O/A	1	1	—	1	1	—
2	S26-3	Washer, fixing nut	1	1	—	1	1	—
3	S1-51	Nut, stay stud	1	1	—	1	1	—

INDEX FIG. 12

Illust. No.	*Part No.*	*Page No.*	*Ref. No.*	*Illust. No.*	*Part No.*	*Page No.*	*Ref. No.*
1	E3426	45	1	15	DS57	45	19
	E3346	45	3	16	F1369	45	22
	E3347	45	4	17	S26-2	45	20
2	E3462	45	2	18	F879	45	21
	E3472	45	5	19	E3651	45	25
3	E3349	45	8	20	E3652	45	26
	E3350	45	6	21	E3470	45	27
4	E3463	45	7	22	DS55	45	28
	E3473	45	9	23	F1213	45	29
5	E1269	45	10	24	S1-51	45	30
6	E3469	45	11	25	S25-3	45	31
7	E410A	45	13	26	E3767	45	32
8	E409	45	12	27	F3430	45	37
9	TE164E	45	14	28	E3768	45	38
10	TE164C	45	15	29	E1310	45	39
11	TE164D	45	16	30	F4141	45	40
12	E2989	45	17	31	F3641	47	1
13	E2990	45	18	32	S1-51	47	3
14	F1699	45	23	33	S26-3	47	2

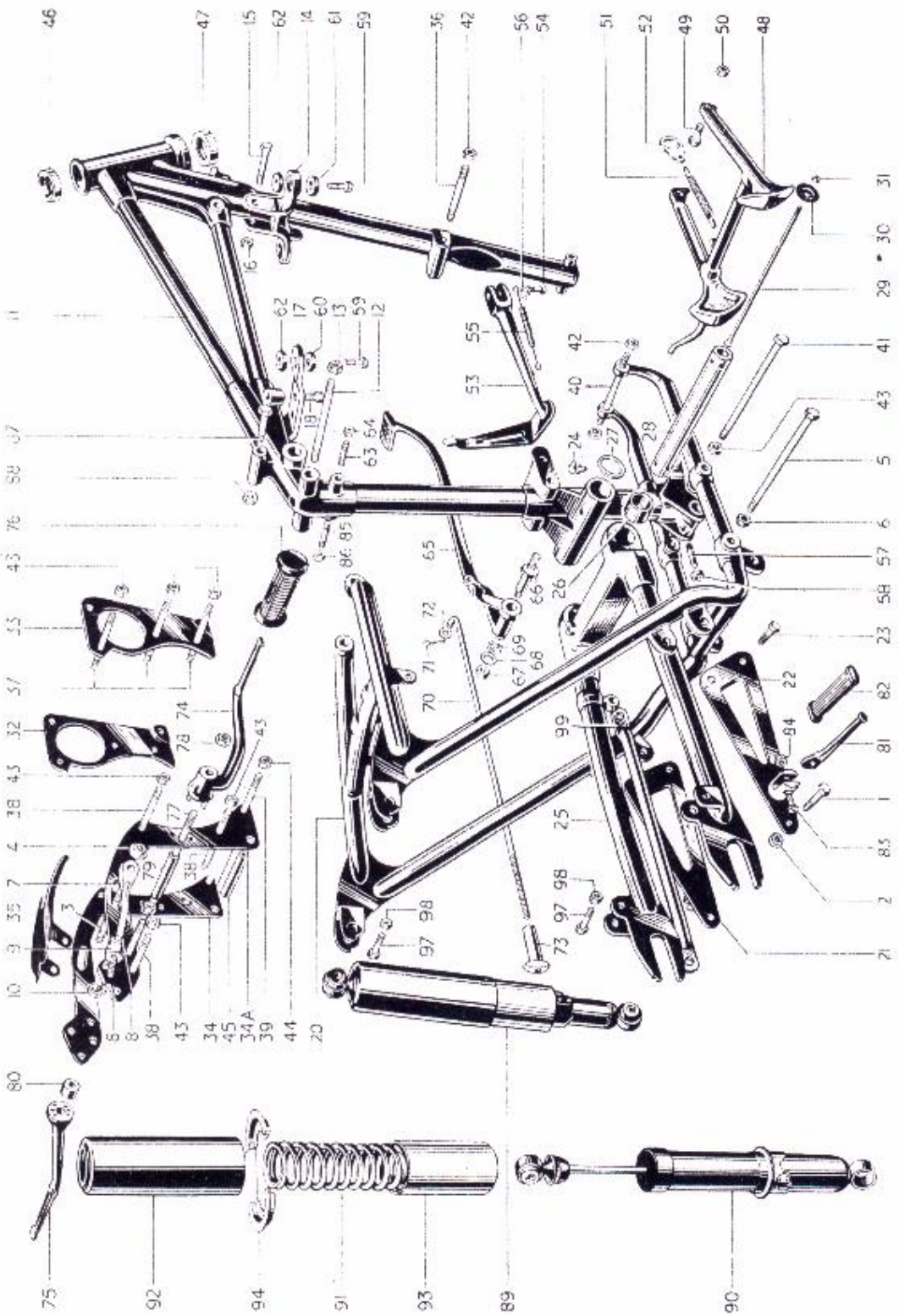

FIG. 13. FRAME

FIG. 13. FRAME

INDEX FIG. 13

Illust. No.	Part No.	Page No.	Ref. No.
1	DS55	45	27
2	S1-51	45	29
3	F3769	36	28
4	F3772	36	31
5	F3575	37	1
6	DS47	37	2
7	F3768	37	4
8	S1-51	37	6
9	F3767	37	7
10	PO172A	37	9
11	F3904	50	1
12	F1561	50	22
13	PO172A	50	23
14	F1841	50	6
	F3900	50	7
15	F1451	50	8
16	S1-52	50	9
17	F4273	50	10
	F4274	50	11
18	F3816	50	15
20	F3635	50	25
21	F3718	50	26
22	F3580	50	27
23	F2603	50	28
24	KW194	50	32
25	F1431	51	1
26	F3690	51	2
27	F3574	51	3
28	F3564	51	4
29	F3797	51	5
30	F3798	51	6
31	F3799	51	7
32	F2646	52	1
	E2222	52	2
33	F2647	52	3
	E2223	52	4
34	F3760	52	5
34A	F3541	52	6
35	F3571	53	2
36	F2414	53	3
37	F1711	53	4
38	F839	53	5
39	F3665	53	6
40	F1680	53	7
41	F3108	53	8
42	DS47	53	9
43	PO172A	53	10
44	S1-52	53	11
45	F862	53	14
46	H111	58	27
47	H111	58	27
48	F4304	51	19
49	F3619	51	20
50	F2725	51	21
51	F3617	51	22
52	F3818	51	23
53	F3723	51	24
54	F3097	51	25
55	F2610	51	26
56	F3096	51	27
57	F3641	47	1
58	S1-51	47	3
59	F1808	73	13
60	F3815	73	16
61	F967	73	15
62	F1813	73	14
63	F3641	74	11
64	F1008	74	12
65	F3595	83	1
66	F867	83	2
67	S1-52	83	5
68	S25-2	83	6
69	S26-16	83	7
70	F3597	83	8
71	Split Pin	83	9
72	S25-13	83	10
73	F3667	83	12
74	F3593	83	13
75	F987	83	14
76	NF704	83	15
77	F3592	83	16
78	DS48	83	17
79	F862	83	19
80	T87	83	20
81	F1694	83	21
82	F1695	83	22
83	F2271	83	23
84	S1-51	83	24
85	F3641	83	11
86	F1008	83	12
87	E2593	107	3
	F3006	107	4
88	S1-51	107	6
89	See page 108		
90	See page 108		
91	See page 108		
92	9054/151	108	14
93	9054/47	108	15
94	9054/171	108	13
97	E2113	108	20
98	PO172A	108	22
99	F3774	51	8

GROUP 9 – FRAME

REF. No.	PART No.	DESCRIPTION	5T	6T	TR5	T100	T110	TR6
		FRONT PORTION						
1	F3904	Frame, front portion	1	1	1	1	1	1
2	F3906	Bolt, steering stop $\frac{8}{16}$" U/H	2	2	—	2	2	—
3	F3907	Bolt, steering stop (Export Tigers only) $\frac{11}{32}$" U/H	—	—	2	A	A	2
4	T224	Locknut, stop bolt	2	2	—	2	2	—
5	E2287	Washer, stop bolt	—	—	2	A	A	2
6	F1841	Support, petrol tank front	1	1	—	1	1	—
7	F3900	Support, petrol tank front (Export Tigers only)	—	—	1	A	A	1
8	F1451	Bolt, petrol tank front support $2\frac{1}{16}$" U/H	1	1	1	1	1	1
9	SI-52	Nut, petrol tank front support	1	1	1	1	1	1
10	F4273	Support, petrol tank rear	1	—	1	1	1	1
11	F4274	Support, petrol tank rear	—	1	—	—	—	—
12	F3814	Cup, tank support rubbers	4	4	4	4	4	4
13	F967	Washer, rubber top	2	2	2	2	2	2
14	F3815	Washer, rubber spigotted lower	2	2	2	2	2	2
15	F3816	Bolt, tank support to frame $1\frac{3}{16}$" U/H ...	2	2	2	2	2	2
16	E3308	Stay, engine to frame torque	2	2	2	2	2	2
17	F2603	Bolt torque stay to frame lug $\frac{12}{16}$" U/H ...	1	1	1	1	1	1
18	SI-51	Nut, torque stay bolt	1	1	1	1	1	1
19	S26-3	Washer, torque stay bolt	1	1	1	1	1	1
20	SI-52	Nut, torque stay to engine bolt	2	2	2	2	2	2
21	S26-1	Washer, torque stay to engine bolt	2	2	2	2	2	2
22	F1561	Stud, seat lug to back stays $5\frac{3}{16}$" O/A ...	1	1	1	1	1	1
23	PO172A	Nut, seat lug to back stays stud	2	2	2	2	2	2
24	S26-1	Washer, seat lug to back stays stud	2	2	2	2	2	2

SEE FRONT FORK GROUP FOR STEERING RACES PAGE 58

		REAR PORTION						
25	F3635	Frame, rear portion	1	1	1	1	1	1
26	F3718	Support bracket L.H. silencer	1	1	1	1	1	1
27	F3580	Support bracket R.H. silencer	1	1	1	1	1	1
28	F2603	Bolt, bracket to frame $\frac{12}{16}$" U/H	1	1	1	1	1	1
29	E1396	Stud, bracket to frame $1\frac{1}{16}$" O/A	2	2	2	2	2	2
30	SI-51	Nut, bracket to frame bolts and stud ...	3	3	3	3	3	3
31	S26-3	Washer, bracket to frame bolts and stud ...	3	3	3	3	3	3
32	KW194	Lubricator, swinging fork	1	1	1	1	1	1
33	WE170	Washer, lubricator	1	1	1	1	1	1

ALWAYS QUOTE COLOURS WHEN ORDERING FRAME PARTS.

10 TR6	REF. No.	PART No.	DESCRIPTION	5T	6T	TR5	T100	T110	TR6
			SWINGING FORK						
1	1	F4131	Swinging fork assy. c/w bushes	1	1	1	1	1	1
—	2	F3690	Bush, fork lug	2	2	2	2	2	2
2	3	F3574	Spacing Washer, R.H.	1	1	1	1	1	1
—	4	F3564	Spindle, S/Fork	1	1	1	1	1	1
2	5	F3797	Rod, cap retaining	1	1	1	1	1	1
—	6	F3798	Cap, spindle retaining	2	2	2	2	2	2
1	7	F3799	Nut, cap retaining	1	1	1	1	1	1
1	8	F3774	Stay, rear brake torque	1	1	1	1	1	1
1	9	F3780	Bolt, stay to fork 1 1/16" U/H	1	1	1	1	1	1
1	10	DS47	Nut, stay bolt	1	1	1	1	1	1
—	11	PCW73A	Washer, stay bolt nut	1	1	1	1	1	1
4									
2									
2			**STAND—GROUP 10**						
2									
2			**FRONT STAND**						
1									
1	12	H412	Front stand	1	1	1	1	1	1
1	13	DS55	Bolt, front guard to stand 43/56" U/H	1	1	1	1	1	1
2	14	SI-51	Nut, front guard to stand bolt...	1	1	1	1	1	1
2	15	NS362	Nut, front stand to guard spigot	1	1	1	1	1	1
1	16	H424	Screw, front stand to fork pivot 43/64" U/H	2	2	2	2	2	2
2	17	S25-3	Washer, pivot screw plain	2	2	2	2	2	2
2	18	H425	Washer, pivot screw spring	2	2	2	2	2	2
			CENTRE STAND						
	19	F4304	Centre stand	1	1	1	1	1	1
1	20	F3619	Pivot bolt, stand to frame 1 3/16" U/H ...	2	2	2	2	2	2
1	21	F2725	Nut, stand to frame bolt	2	2	2	2	2	2
1	22	F3617	Spring, centre stand	1	1	1	1	1	1
1	23	F3618	Connecting link, stand spring	1	1	1	1	1	1
2									
3			**PROP STAND**						
3									
1	24	F3723	Prop stand	1	1	1	1	1	1
1	25	F3097	Swivel pin, prop stand 1 1/4" U/H	1	1	1	1	1	1
	26	F2610	Spring, tension	1	1	1	1	1	1
	27	F3096	Lock washer, swivel pin	1	1	1	1	1	1

REF. No.	PART No.	DESCRIPTION	5T	6T	TR5	T100	T110	TR6

ENGINE PLATE—GROUP 11

1	F2646	Plate, engine front L.H.	1	1	—	—	—	—
2	E2222	Plate, engine front L.H.	—	—	1	1	1	1
3	F2647	Plate, engine front R.H.	1	1	—	—	—	—
4	E2223	Plate, engine front R.H.	—	—	1	1	1	1
5	F3760	Plate, engine rear L.H.	1	1	1	1	1	1
6	F3541	Plate, engine rear R.H.	1	1	1	1	1	1
7	F3688	Undershield, crankcase	—	—	1	—	—	1

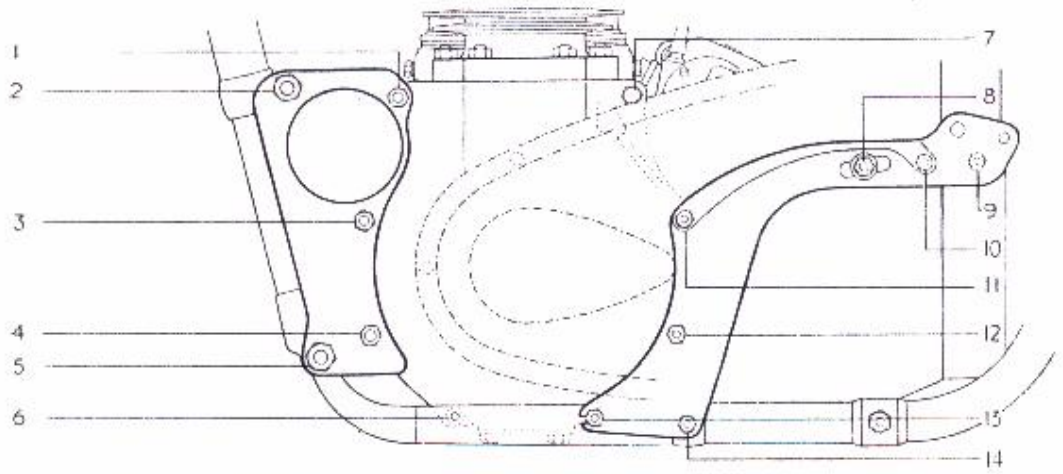

FIG. 14. ENGINE PLATE—STUDS, BOLTS, NUTS AND WASHERS

INDEX FIG. 14

Illust. No.	*Part No.*	*Description*
1, 3 and 4	F1711	Stud
	PO172A	Nut
	S26-1	Spring Washer
2	F2414	Stud
	DS47	Nut
	PCW73A	Spring Washer
5	F1680	Stud
	DS47	Nut
	PCW73A	Spring Washer
6	T456	Stud
	S1-51	Nut
	S25-3	Washer
7	E1555	Bolt
	S25-3	Washer
8	F3769	Stud
	F3770	Washer T.S.
	F3771	Nut D.S.
	F3772	Nut T.S.
9, 10, 11 and 12	F839	Stud
	PO172A	Nut
	S26-1	Spring Washer
13	F3665	Stud
	S1-52	Nut
	S26-1	Spring Washer
14	F3108	Bolt
	PO172A	Nut
	S26-1	Spring Washer

ENGINE PLATE – GROUP 11
TELESCOPIC FRONT FORK – GROUP 12

REF. No.	PART No.	DESCRIPTION	5T	6T	TR5	T100	T110	TR6
1	E2275	Cover, engine plate front	1	1	1	1	1	1
2	F3571	Cover, engine plate rear	1	1	1	1	1	1
3	F2414	Stud, $\frac{7}{16}$" × 4$\frac{1}{8}$" C.E.I.	1	1	1	1	1	1
4	F1711	Stud, $\frac{3}{8}$" × 4$\frac{1}{16}$" C.E.I.	3	3	3	3	3	3
5	F839	Stud, $\frac{3}{8}$" × 4$\frac{7}{16}$" C.E.I.	4	4	4	4	4	4
5	F3665	Stud, $\frac{3}{8}$" × 4$\frac{1}{4}$" C.E.I.	1	1	1	1	1	1
7	F1680	Stud, $\frac{7}{16}$" × 4$\frac{3}{8}$" C.E.I.	1	1	1	1	1	1
8	F3108	Bolt, rear engine plate to frame 7$\frac{3}{32}$" U/H	1	1	1	1	1	1
9	DS47	Nut, for F2414, F1680 Studs	4	4	4	4	4	4
10	PO172A	Nut, for F1023, F1711, F839 Studs and F3108 bolt	15	15	15	15	15	15
11	SI-52	Nut, for F3665 Stud	2	2	2	2	2	2
12	PCW73A	Washer, for F2414, F1680 Studs	4	4	4	4	4	4
13	S26-1	Washer, for F1711, F839 Studs and F3108 bolt	17	17	17	17	17	17
14	F862	Distance tube for F3108 bolt	1	1	1	1	1	1

FRONT FORK—GROUP 12

15	H.1101	Fork assembly	1	—	—	—	—	—
16	H.1104	Fork assembly	—	1	—	—	—	—
17	H.1103	Fork assembly	—	—	1	—	—	—
18	H.1102	Fork assembly	—	—	—	1	1	—
19	H.1105	Fork assembly	—	—	—	—	—	1
20	H663A	Lug, fork head top	1	1	—	1	1	—
21	H380	Lug, fork head top c/w clips	—	—	1	—	—	1
22	F1760	Bolt, fork head top lug pinch 1$\frac{1}{8}$" U/H ...	1	1	1	1	1	1
23	H379	Nut, fork head top bolt	1	1	1	1	1	1
24	H660	"U" bolt, handlebar clamp	2	2	—	2	2	—
25	S25-3	Washer, handlebar clamp	4	4	—	4	4	—
26	SI-51	Nut, handlebar clamp	4	4	—	4	4	—
27	H506	Cap, handlebar clamp	—	—	2	—	—	2
28	H436	Bolt, handlebar clamp cap $\frac{7}{8}$" U/H ...	—	—	4	—	—	4
29	H942	Crown and stem, fork	1	1	1	1	1	1
30	H405	Nut, crown and stem sleeve	1	1	1	1	1	1
31	H941	Bolt, crown and stem to stanchion 2$\frac{1}{4}$" U/H	2	2	2	2	2	2
32	E2412	Nut, crown and stem to stanchion	2	2	2	2	2	2
33	S25-2	Washer, crown and stem to stanchion ...	2	2	2	2	2	2

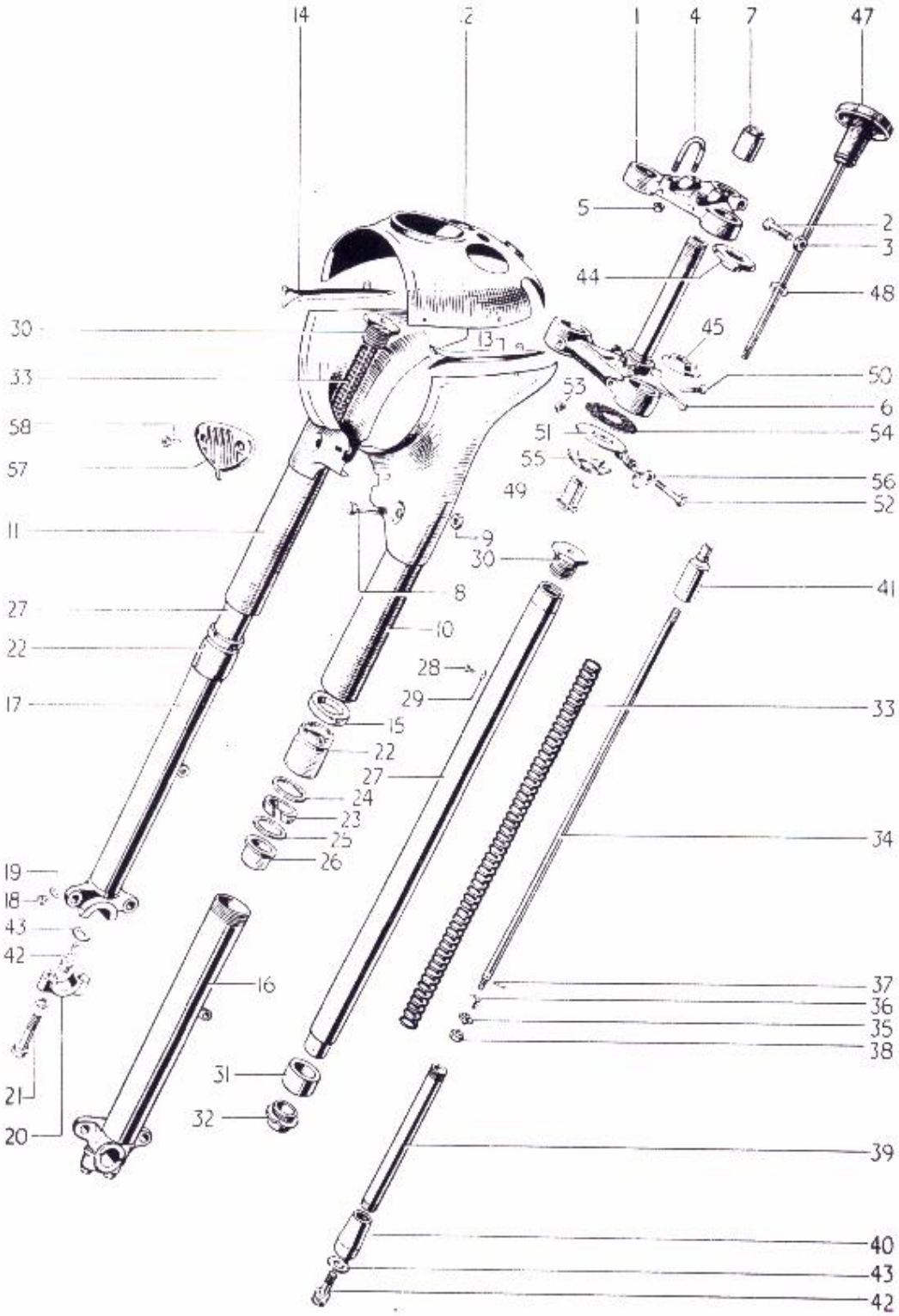

FIG. 15. TELESCOPIC FORK

TELESCOPIC FRONT FORK – GROUP 12

REF. No.	PART No.	DESCRIPTION	5T	6T	TR5	T100	T110	TR6
1	H799	Cover, nacelle L.H.	1	1	—	1	1	—
2	H800	Cover, nacelle R.H.	1	1	—	1	1	—
3	H963	Cover, top c/w headlamp bracket L.H. ...	—	—	1	—	—	1
4	H964	Cover, top c/w headlamp bracket R.H. ...	—	—	1	—	—	1
5	H962	Gaiter, rubber, telescopic	—	—	2	—	—	2
6	D340	Clip, gaiter top	—	—	2	—	—	2
7	H917	Top unit, nacelle	1	1	—	—	—	—
8	H761	Top unit, nacelle	—	—	—	1	1	—
9	A46	Transfer, Thunderbird	—	1	—	—	—	—
10	H669	Grommet, handlebar rubber	2	2	—	2	2	—
11	H689	Screw, top unit to nacelle cover $\frac{1}{4}$" U/H	2	2	—	2	2	—
12	H691	Nut, for H689	2	2	—	2	2	—
13	E2880	Washer, for H691	2	2	—	2	2	—
14	H623	Motif (flash) L.H.	1	1	—	1	1	—
15	H624	Motif (flash) R.H.	1	1	—	1	1	—
16	H688	Screw, motif front $\frac{5}{16}$" U/H	2	2	—	2	2	—
17	H691	Nut, motif front	2	2	—	2	2	—

INDEX FIG. 15

Illust. No.	*Part No.*	*Page No.*	*Ref. No.*	*Illust. No.*	*Part No.*	*Page No.*	*Ref. No.*
1	H663A	53	20	30	H432A	58	6
2	F1760	53	22	31	H443	58	8
3	H379	53	23	32	H444	58	9
4	H660	53	24	33	H384	58	10
5	S1-51	53	26		H505	58	11
6	H942	53	29		H749	58	12
7	H405	53	30	34	H399A	58	15
8	H941	53	31	35	H452	58	17
9	E2412	53	32	36	H543	58	18
10	H799	55	1	37	H454	58	19
11	H800	55	2	38	F879	58	20
12	H917	55	7	39	H394	58	21
	H761	55	8	40	H1096	58	22
13	H623	55	14	41	H397	58	23
14	H624	55	15	42	H1063	58	24
15	H420	57	3	43	H1062	58	25
16	H1069	57	4	44	H1018	58	27
17	H1072	57	5	45	H439	58	28
	H1075	57	6	47	H536	58	30
18	H1071	57	10	48	H565	58	31
19	H430	57	11	49	H408	58	32
20	H1053	57	7	50	H409	58	33
21	H1070	57	9	51	H413	58	34
22	H390	57	12	52	F1718	58	35
23	H391	57	13	53	S1-51	58	36
24	H445	57	14	54	H435	58	37
25	H431	57	15	55	H95	58	38
26	H441	58	1	56	F3098	107	36
27	H382A	58	2	57	H992	57	16
28	H519A	58	4	58	H993	57	17
29	H430	58	5				

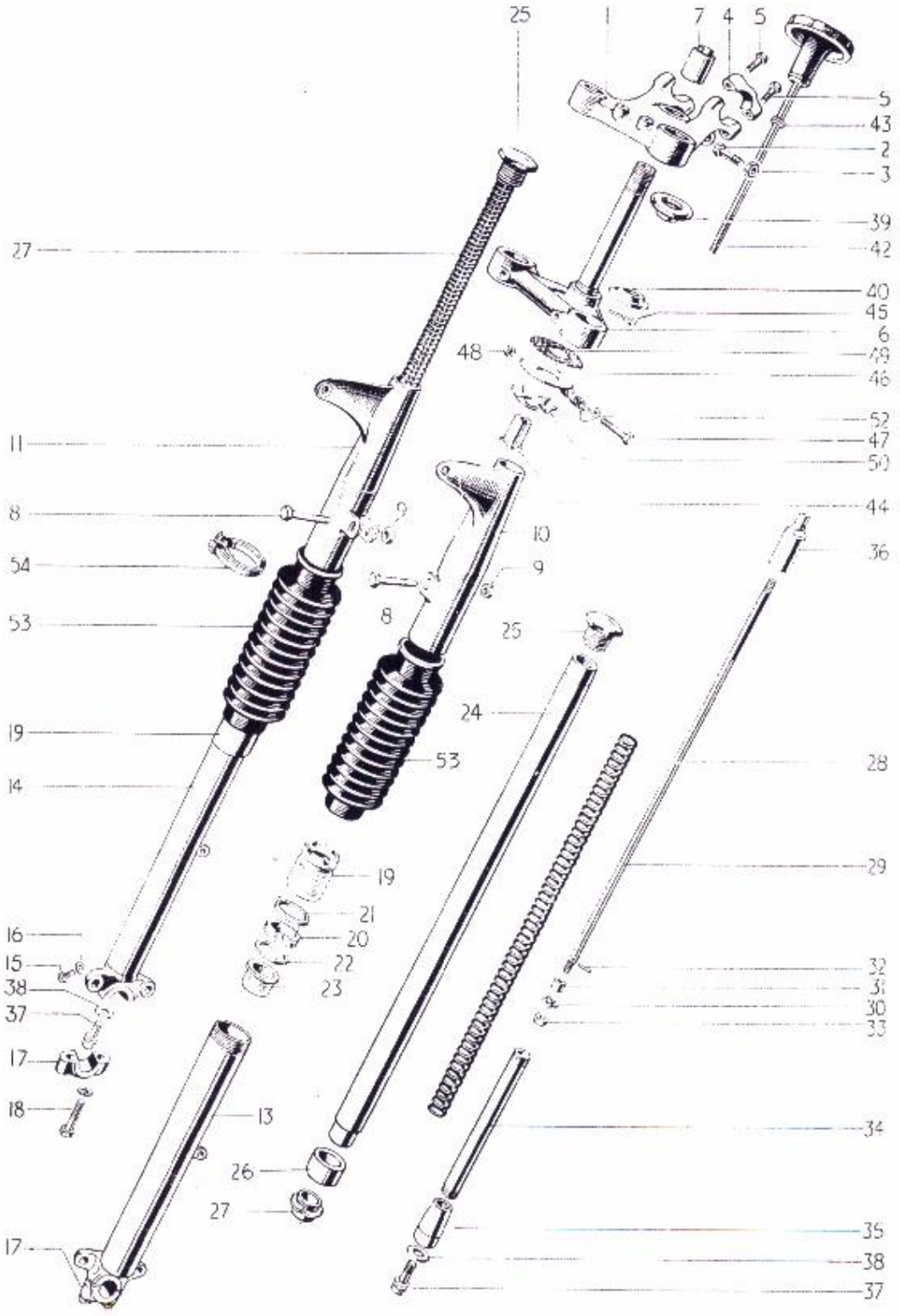

FIG. 16. TELESCOPIC FORK (TROPHY)

TELESCOPIC FRONT FORK – GROUP 12

REF. No.	PART No.	DESCRIPTION	5T	6T	TR5	T100	T110	TR6
1	E2880	Washer, motif front	2	2	—	2	2	—
2	H687	Screw, top unit to nacelle cover $\frac{3}{8}$" U/H	2	2	—	2	2	—
3	H420	Washer, cover tube felt	2	2	—	2	2	—
4	H.1069	Bottom member c/w spindle cap, L.H. ...	1	1	1	1	1	1
5	H.1072	Bottom member c/w spindle cap, R.H. ...	1	1	1	—	—	—
6	H.1075	Bottom member c/w spindle cap, R.H. ...	—	—	—	1	1	1
7	H.1053	Cap, spindle fixing	2	2	2	2	2	2
8	S.26-3	Washer, spring	4	4	4	4	4	4
9	H.1070	Bolt, spindle cap, 1 $\frac{3}{16}$" U/H	4	4	4	4	4	4
10	H.1071	Plug, drain	2	2	2	2	2	2
11	H.430	Washer, drain plug	2	2	2	2	2	2
12	H390	Sleeve, cover tube dust excluder	2	2	2	2	2	2
13	H391	Washer, cover tube dust excluder felt ...	2	2	2	2	2	2
14	H445	Washer, inner—for H391	2	2	2	2	2	2
15	H431	Washer, outer—for H391	2	2	2	2	2	2
16	H992	Horn grille (replaces Pilot Lamp)	1	1	—	1	1	—
17	H993	Screw, grille fixing 0.540" U/H	2	2	—	2	2	—
18	GS299	Washer, shakeproof	2	2	—	2	2	—
19	F3799	Nut, fixing screw	2	2	—	2	2	—

INDEX FIG. 16

Illust. No.	*Part No.*	*Page No.*	*Ref. No.*	*Illust. No.*	*Part No.*	*Page No.*	*Ref. No.*
1	H380	53	21	27	H444	58	9
2	H1760	53	22	28	H384	58	10
3	H379	53	23	29	H399	58	16
4	H506	53	27	30	H452	58	17
5	H436	53	28	31	H453	58	18
6	H942	53	29	32	H454	58	19
7	H405	53	30	33	F879	58	20
8	H941	53	31	34	H394	58	21
9	E2412	53	32	35	H1096	58	22
10	H963	55	3	36	H397	58	23
11	H964	55	4	37	H1063	58	24
13	H1069	57	4	38	H1062	58	25
14	H1072	57	5	39	H1018	58	27
	H1075	57	6	40	H439	58	28
15	H1071	57	10	42	H536	58	30
16	H430	57	11	43	H565	58	31
17	H1053	57	7	44	H408	58	32
18	H1070	57	9	45	H409	58	33
19	H390	57	12	46	H413	58	34
20	H391	57	13	47	F1718	58	35
21	H445	57	14	48	S1-51	58	36
22	H431	57	15	49	H435	58	37
23	H441	58	1	50	H95	58	38
24	H382	58	3	52	F3098	107	36
25	H432	58	7	53	H962	55	5
26	H443	58	8	54	D340	55	6

GROUP 12 – TELESCOPIC FRONT FORK

REF. No.	PART No.	DESCRIPTION	5T	6T	TR5	T100	T110	TR6
1	H441	Bearing, bottom cover tube	2	2	2	2	2	2
2	H382A	Stanchion	2	2	—	2	2	—
3	H382	Stanchion	—	—	2	—	—	2
4	H519A	Plug, stanchion oil filler $\frac{3}{16}$" U/H	2	2	—	2	2	—
5	H430	Washer, stanchion oil filler	2	2	—	2	2	—
6	H432A	Nut, stanchion upper sleeve cap	2	2	—	2	2	—
7	H432	Nut, stanchion upper sleeve cap	—	—	2	—	—	2
8	H443	Bearing, stanchion lower	2	2	2	2	2	2
9	H444	Nut, stanchion hydraulic stop	2	2	2	2	2	2
10	H384	Spring, main (identification RED)	2	2	2	2	2	2
11	H505	Spring, main (identification BLUE) Sidecar	A	A	A	A	A	A
12	H749	Spring, main (identification PURPLE) Extra-heavy sidecar	A	A	A	A	A	A
13	H1106	Pressure tube assembly	2	2	—	2	2	—
14	H1107	Pressure tube assembly	—	—	2	—	—	2
15	H399A	Rod, oil pressure	2	2	—	2	2	—
16	H399	Rod, oil pressure	—	—	2	—	—	2
17	H452	Restrictor, oil	2	2	2	2	2	2
18	H453	Cup, oil restrictor rod	2	2	2	2	2	2
19	H454	Pin, oil restrictor rod cup	2	2	2	2	2	2
20	F879	Nut, oil restrictor rod	2	2	2	2	2	2
21	H394	Tube pressure	2	2	2	2	2	2
22	H1096	Body, pressure tube valve	2	2	2	2	2	2
23	H397	Sleeve, pressure tube support	2	2	2	2	2	2
24	H1063	Bolt, valve body to lug $\frac{33}{32}$" U/H	2	2	2	2	2	2
25	H1062	Washer, valve body bolt (aluminium)	2	2	2	2	2	2

STEERING CUPS, CONES AND BALLS

26	H111	Cup, frame lug, top and bottom	2	2	2	2	2	2
27	H1018	Cone, head lug, top, c/w dust cover	1	1	1	1	1	1
28	H439	Cone, crown and stem, bottom	1	1	1	1	1	1
29	S70-3	Ball, top and bottom race $\frac{1}{4}$"	40	40	40	40	40	40

STEERING DAMPER

30	H536	Knob, c/w rod	1	1	1	1	1	1
31	H565	Washer, damper knob abutment	1	1	1	1	1	1
32	H408	Sleeve, damper adjusting	1	1	1	1	1	1
33	H409	Pin, sleeve securing	1	1	1	1	1	1
34	H413	Plate, damper anchor	1	1	1	1	1	1
35	F1718	Bolt, damper anchor plate 1 $\frac{5}{16}$" U/H	1	1	1	1	1	1
36	SI-51	Nut, damper anchor plate	1	1	1	1	1	1
37	H435	Disc, damper anchor plate friction	1	1	1	1	1	1
38	H95	Spring, damper anchor plate	1	1	1	1	1	1

FRONT WHEEL—GROUP 13

REF. No.	PART No.	DESCRIPTION	5T	6T	TR5	T100	T110	TR6
1	W.1299	Wheel, front complete	1	1	1	—	—	—
2	W.1249	Wheel, front complete	—	—	—	1	1	1
3	W.1229	Rim, spokes and hub assembly	1	1	1	—	—	—
4	W.1250	Rim, spokes and hub assembly	—	—	—	1	1	1
5	W.1230	Rim, front wheel WM.2—19	1	1	1	—	—	—
6	W.351	Rim, front wheel WM.2—19	—	—	—	1	1	1
7	*W.1236	Spoke, straight 8/10G × 6"	40	40	40	—	—	—
8	*W.660	Spoke, L.H. outer 88° 10G × $8\frac{11}{32}$"	—	—	—	10	10	10
9	*W.661	Spoke, L.H. inner 90° 10G × $8\frac{11}{32}$"	—	—	—	10	10	10
10	*W.1166	Spoke, R.H. outer 80° 8/10G × 6"	—	—	—	10	10	10
11	*W.1167	Spoke, R.H. inner 95° 8/10G × 6"	—	—	—	10	10	10
12	2.79-2	Nipple, spoke	40	40	40	40	40	40
13	W.1231	Hub and brake drum	1	1	1	—	—	—
14	W.1260	Hub	—	—	—	1	1	1
15	W.1165	Drum, brake	—	—	—	1	1	1
16	W.62	Bolt, drum to hub $\frac{11}{16}$" U.H.	—	—	—	8	8	8
17	S.1-51	Nut, drum to hub	—	—	—	8	8	8
18	W.63	Lockplate, drum nut	—	—	—	4	4	4
19	W.1239	Spindle, front wheel	1	1	1	—	—	—
20	W.1253	Spindle, front wheel	—	—	—	1	1	1
21	W.653	Bearing, front wheel	2	2	2	2	2	2
22	W.1237	Dust cover, L.H. Bearing	1	1	1	1	1	1
23	T.280	Circlip, L.H. Bearing	1	1	1	1	1	1
24	W.1238	Backing ring, R.H. Bearing	1	1	1	—	—	—
25	W.582	Retaining ring, R.H., Bearing	1	1	1	1	1	1
26	W.1247	Cover plate, L.H. Hub	1	1	1	—	—	—
27	W.1197	Weight, wheel balance $\frac{3}{4}$"	As required					
28	W.1198	Weight, wheel balance 1"						

*Supplied complete with nipple S.79-2.

FRONT WHEEL BRAKE

29	W.1301	Plate, front brake anchor	1	1	1	—	—	—
30	W.1255	Plate, front brake anchor c/w gauze	—	—	—	1	1	1
31	W.1059	Gauze, air intake	—	—	—	1	1	1
32	W.1169	Plate, blanking	—	—	—	A	A	A
33	H.689	Screw, gauze securing $\frac{1}{4}$" U.H.	—	—	—	2	2	2
34	W.1302	Pin, shoe fulcrum	1	1	1	—	—	—
35	W.758	Pin, shoe fulcrum	—	—	—	1	1	1
36	S.25-2	Washer, fulcrum pin nut	1	1	1	1	1	1
37	E.1435	Domed nut, fulcrum pin	1	1	1	—	—	—
38	PO.172A	Nut, fulcrum pin	—	—	—	1	1	1

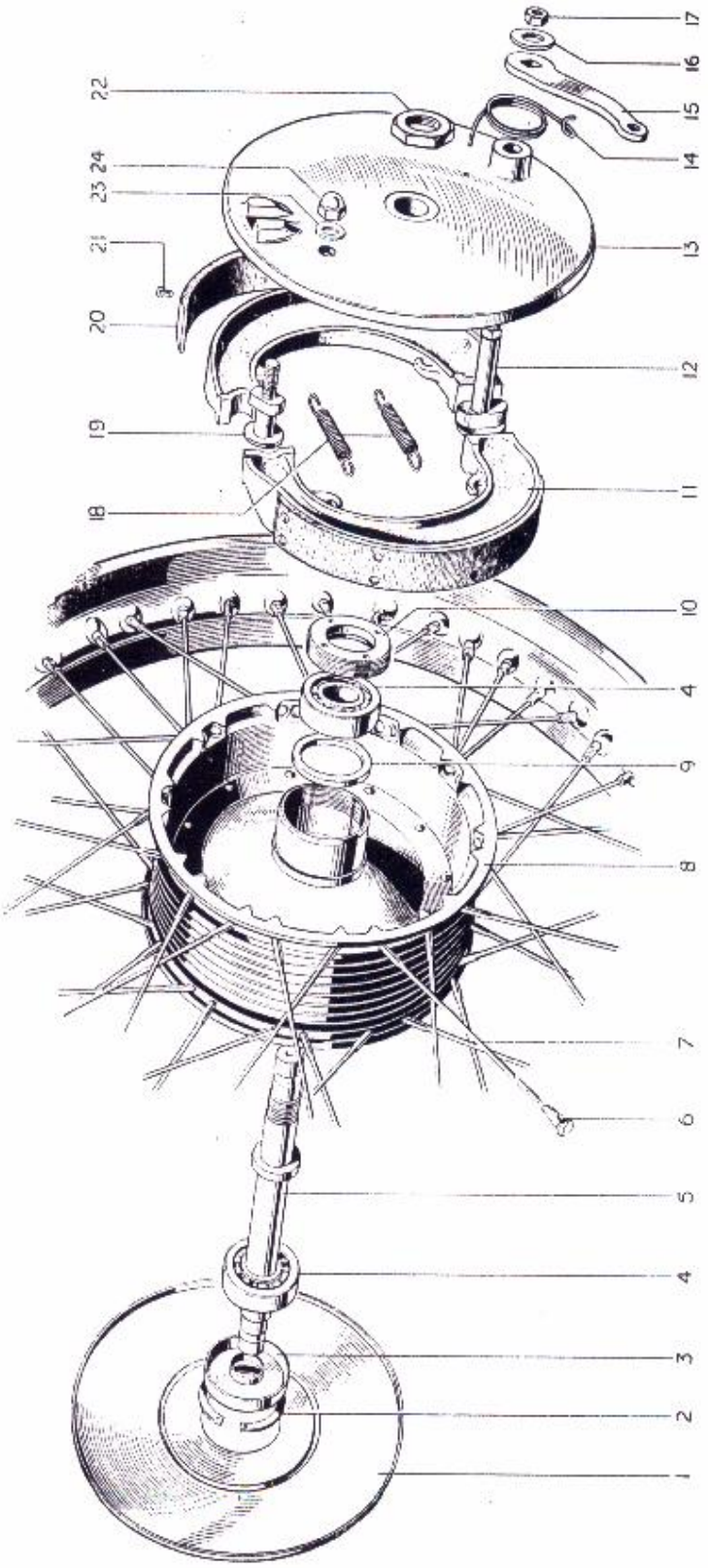

FIG. 17. FRONT WHEEL *for* SPEED TWIN (5T), THUNDERBIRD (6T), TROPHY (TR5).

REF. No.	PART No.	DESCRIPTION	5T	6T	TR5	T100	T110	TR6
1	W93	Shoe, brake c/w lining	2	2	2	—	—	2
2	W1086	Shoe, brake c/w lining, leading	—	—	—	1	1	—
3	W1087	Shoe, brake c/w lining, trailing	—	—	—	1	1	—
4	NW243	Lining, brake shoe	2	2	2	—	—	2
5	W631	Lining, brake shoe	—	—	—	2	2	—
6	W129	Rivets, brake shoe lining	16	16	16	16	16	16
7	W135	Spring, brake shoe return	2	2	2	2	2	2
8	W1243	Cam, brake operating	1	1	1	—	—	—
9	W780	Cam, brake operating	—	—	—	1	1	1
10	W1245	Lever, brake cam	1	1	1	1	1	1
11	S1-52	Nut, brake cam lever	1	1	1	1	1	1
12	S25-6	Washer, brake cam lever	1	1	1	1	1	1
13	W592	Spring, brake cam lever return	1	1	1	1	1	1
14	WF32	Pin, brake cam lever pivot	1	1	1	1	1	1
15		$\frac{1}{16}$" × $\frac{1}{2}$" Split pin, pivot pin	1	1	1	1	1	1
16	W.1246	Nut, anchor plate to spindle	1	1	1	1	1	1

INDEX FIG. 17

Illust. No.	*Part No.*	*Page No.*	*Ref. No.*	*Illust. No.*	*Part No.*	*Page No.*	*Ref. No.*
1	W.1247	59	26	13	W.1301	59	29
2	T.280	59	23	14	W.592	61	13
3	W.1237	59	22	15	W.1245	61	10
4	W.653	59	21	16	S.25-6	61	12
5	W.1239	59	19	17	S.1-52	61	11
6	S.79-2	59	12	18	W.135	61	7
7	W.1236	59	7	19	W.1302	59	34
8	W.1231	59	13	20	NW.243	61	4
9	W.1238	59	24	21	W.129	61	6
10	W.582	59	25	22	W.1246	61	16
11	W.93	61	1	23	S.25-2	59	36
12	W.1243	61	8	24	E.1435	59	37

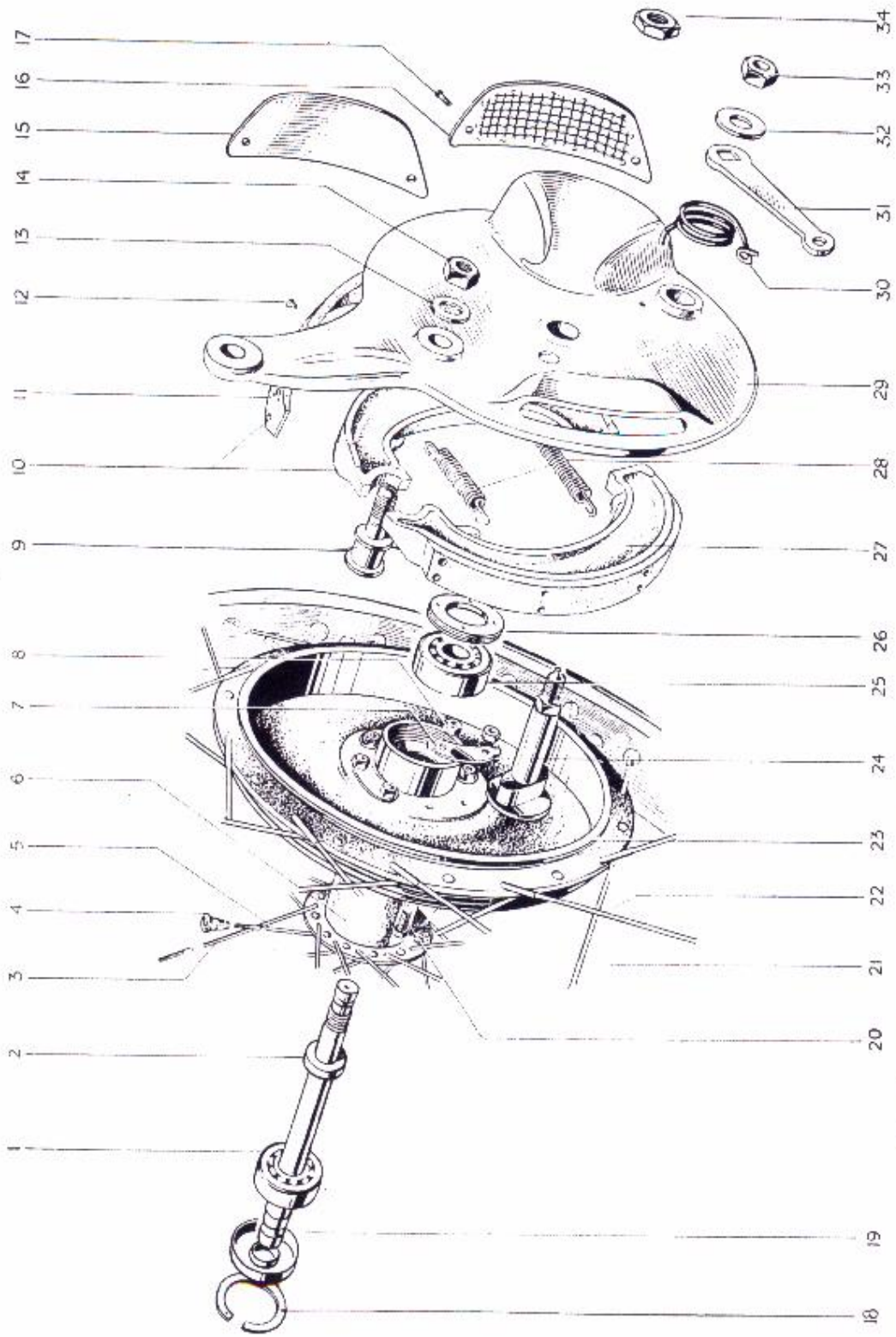

FIG. 18. FRONT WHEEL—TIGER 100 (T100), TIGER 110 (T110) AND TROPHY (TR6)

INDEX FIG. 18

Illust. No.	*Part No.*	*Page No.*	*Ref. No.*
1	W.653	59	21
2	W.1253	59	20
3	W.661	59	9
4	S.79-2	59	12
5	W.660	59	8
6	W.1260	59	14
7	W.63	59	18
8	S.1-51	59	17
9	W.758	59	35
10	W.1087	61	3
11	W.631	61	5
12	W.129	61	6
13	S.25-2	59	36
14	PO.172A	59	38
15	W.1169	59	32
16	W.1059	59	31
17	H.689	59	33
18	T.280	59	23
19	W.1237	59	22
20	W.62	59	16
21	W.1167	59	11
22	W.1166	59	10
23	W.1165	59	15
24	W.780	61	9
25	W.653	59	21
26	W.582	59	25
27	W.1086	61	2
28	W.135	61	7
29	W.1255	59	30
30	W.592	61	13
31	W.1245	61	10
32	S.25-6	61	12
33	S.1-52	61	11
34	W.1246	61	16

REF. No.	PART No.	DESCRIPTION	5T	6T	TR5	T100	T110	TR6

REAR WHEEL—GROUP 14

1	W.1305	Wheel, rear complete	1	1	—	1	1	—
2	W.1307	Wheel, rear complete	—	—	1	—	—	1
3	W.1306	Rim, spokes and hub assembly	1	1	—	1	1	—
4	W.1308	Rim, spokes and hub assembly	—	—	1	—	—	1
5	W.79A	Rim, rear wheel WM.2-19	1	1	—	1	1	—
6	W.1007	Rim, rear wheel WM.3-18	—	—	1	—	—	1
7	*W.1104	Spoke, L.H. 8/10G × 8" 90°	20	20	—	20	20	—
8	*W.1106	Spoke, R.H. 8/10G × 8⅛" 90°	20	20	—	20	20	—
9	*W.1107	Spoke, L.H. 8/10G × 7 $\frac{9}{16}$" 90°	—	—	20	—	—	20
10	*W.1108	Spoke, R.H. 8/10G × 7⅞" 90°	—	—	20	—	—	20
11	S.79-2	Nipple, spoke	40	40	40	40	40	40
12	W.1158	Hub	1	1	1	1	1	1
13	W951	Sprocket, and drum (46T)	1	1	1	1	1	1
14	W62	Bolt, sprocket and drum to hub $\frac{11}{16}$" U/H ...	8	8	8	8	8	8
15	SI-51	Nut, sprocket and drum to hub	8	8	8	8	8	8
16	W63	Lockplate, sprocket and drum nut	8	8	8	8	8	8
17	W1025	Spindle, rear wheel	1	1	1	1	1	1
18	F1747	Nut, rear wheel spindle	2	2	2	2	2	2
19	W653	Bearing, rear wheel ball	2	2	2	2	2	2
20	W1022	Ring, bearing backing L.H.	1	1	1	1	1	1
21	W1023	Distance, tube, bearing	1	1	1	1	1	1
22	W1021	Retaining ring, bearing	1	1	1	1	1	1
23	W1079	Locking screw, bearing retaining ring $\frac{5}{16}$" U/H	1	1	1	1	1	1
24	W1024	Distance piece, L.H. bearing	1	1	1	1	1	1
25	W583	Cap, bearing dust R.H.	1	1	1	1	1	1
26	W1026	Nut, bearing retaining R.H.	1	1	1	1	1	1
27	W1134	Chain adjuster, rear wheel	2	2	2	2	2	2
28	W1015	End plate, adjuster	2	2	2	2	2	2
29	W1058	Nut, adjuster end plate	2	2	2	2	2	2
30	D106	Bolt, tyre security	1	1	—	—	—	—
31	WM3	Bolt, tyre security	—	—	2	—	—	2

* *Supplied complete with nipple.*

REAR WHEEL BRAKE

32	W1112	Plate, rear brake anchor	1	1	1	1	1	1
33	F1747	Locknut, rear brake anchor plate	1	1	1	1	1	1
34	W93	Shoe assembly, rear with lining	2	2	2	2	2	2
35	NW243	Lining, rear brake shoe	2	2	2	2	2	2
36	W129	Rivet, brake shoe lining	16	16	16	16	16	16
37	W135	Spring, brake shoe return	2	2	2	2	2	2
38	W1083	Cam assembly rear brake	1	1	1	1	1	1
39	W1085	Lever, rear brake cam	1	1	1	1	1	1
40	SI-52	Nut, rear brake cam lever	1	1	1	1	1	1
41	W1090	Spring, rear brake cam lever return	1	1	1	1	1	1
42	DS47	Nut, Torque stay securing	1	1	1	1	1	1
43	PCW73A	Washer, torque stay nut	1	1	1	1	1	1

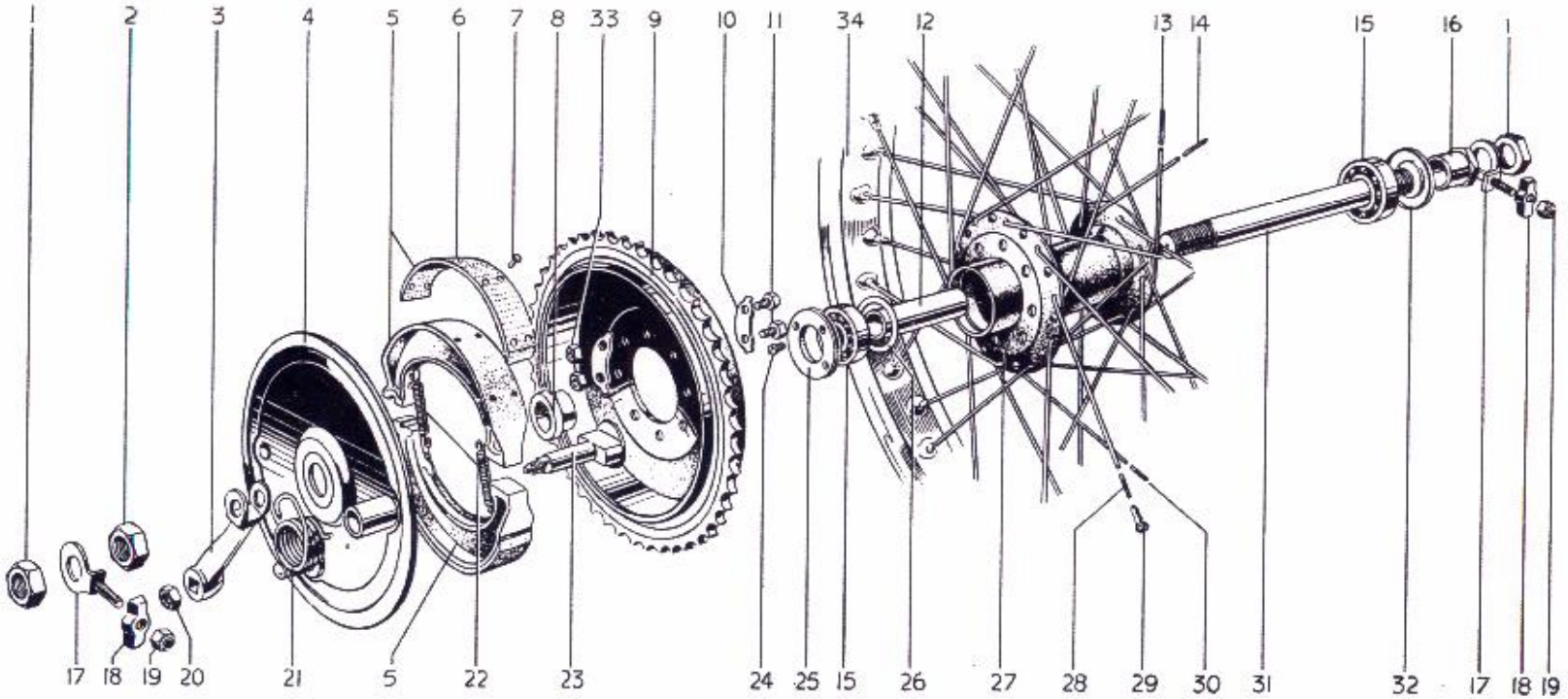

FIG. 19. REAR WHEEL

INDEX FIG. 19

Illust. No.	Part No.	Page No.	Ref. No.	Illust. No.	Part No.	Page No.	Ref. No.	Illust. No.	Part No.	Page No.	Ref. No.
1	F1747	64	18	13	W1108	64	10	25	W1021	64	22
2	F1747	64	33	14	W1106	64	8	26	W1022	64	20
3	W1085	64	39		W1108	64	10	27	W1158	64	12
4	W1112	64	32	15	W653	64	19	28	W1104	64	7
5	W93	64	34	16	W1026	64	26		W1107	64	9
6	NW243	64	35	17	W1134	64	27	29	S79-2	64	11
7	W129	64	36	18	W1015	64	28	30	W1104	64	7
8	W1024	64	24	19	W1058	64	29		W1107	64	9
9	W951	64	13	20	S1-52	64	40	31	W1025	64	17
10	W63	64	16	21	W1090	64	41	32	W583	64	25
11	W62	64	14	22	W135	64	37	33	S1-51	64	15
12	W1023	64	21	23	W1083	64	38	34	W79A	64	5
13	W1106	64	8	24	W1079	64	23		W1007	64	6

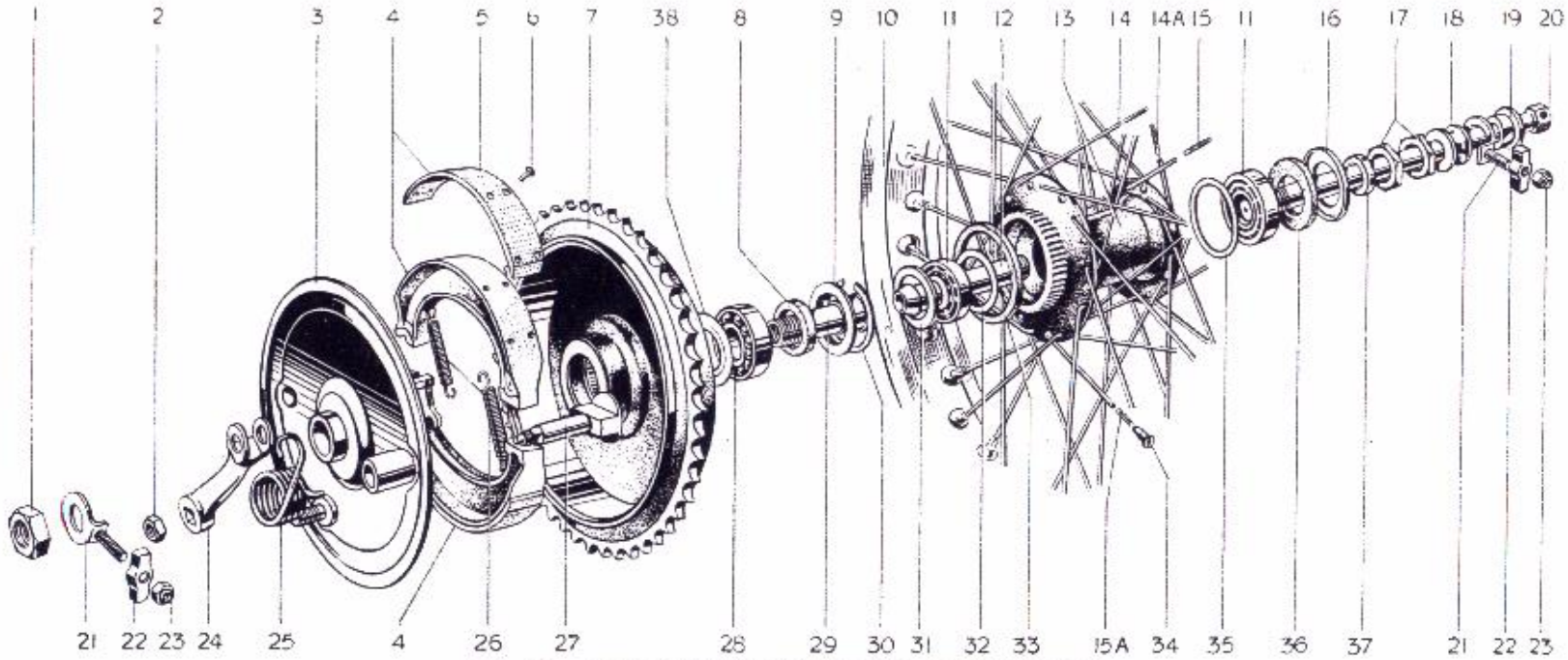

FIG. 20. REAR WHEEL (QUICKLY DETACHABLE)

INDEX FIG. 20

Illust. No.	*Part No.*	*Page No.*	*Ref. No.*	*Illust. No.*	*Part No.*	*Page No.*	*Ref. No.*	*Illust. No.*	*Part No.*	*Page No.*	*Ref. No.*
1	W1052	67	32		W1107	67	9	24	W1085	67	42
2	S1-52	67	41	14A	W1106	67	8	25	W1090	67	40
3	W1121	67	38		W1108	67	10	26	W135	67	46
4	W93	67	43	15	W1106	67	8	27	W1083	67	39
5	NW243	67	44		W1108	67	10	28	W1041	67	24
6	W129	67	45	15A	W1104	67	7	29	W1045	67	28
7	W1040	67	22		W1107	67	9	30	W1044	67	27
8	W1042	67	25	16	W1038	67	18	31	W1035	67	15
9	W1043	67	26	17	E398	67	20	32	W1033	67	13
10	W79A	67	5	18	W1053	67	33	33	W1091	67	21
	W1007	67	6	19	W1170	67	34	34	S79-2	67	11
11	W1034	67	14	20	W1055	67	35	35	W1033	67	13
12	W1039	67	19	21	W1135	67	29	36	W1036	67	16
13	W1100	67	12	22	W1015	67	30	37	W1037	67	17
14	W1104	67	7	23	W1058	67	31	38	W1143	67	23

REAR WHEEL (QUICKLY DETACHABLE)—GROUP 15

REF. No.	PART No.	DESCRIPTION	5T	6T	TR5	T100	T110	TR6
1	W1309	Wheel, Q.D. rear complete	1	1	—	1	1	—
2	W1310	Wheel, Q.D. rear complete	—	—	1	—	—	1
3	W1098	Wheel, less internals and brake fittings	1	1	—	1	1	—
4	W1099	Wheel, less internals and brake fittings	—	—	1	—	—	1
5	W79A	Rim, WM2-19	1	1	—	1	1	—
6	W1007	Rim, WM3-18	—	—	1	—	—	1
7	*W.1104	Spoke, L.H. 8/10G × 8" 90°	20	20	—	20	20	—
8	*W.1106	Spoke, R.H. 8/10G × 8⅛" 90°	20	20	—	20	20	—
9	*W.1107	Spoke, L.H. 8/10G × 7 9/16" 90°	—	—	20	—	—	20
10	*W.1108	Spoke, R.H. 8/10G × 7⅝" 90°	—	—	20	—	—	20
11	S.79-2	Nipple, spoke	40	40	40	40	40	40
12	W1100	Hub	1	1	1	1	1	1
13	W1033	Backing ring, bearing	2	2	2	2	2	2
14	W1034	Bearing, taper roller	2	2	2	2	2	2
15	W1035	Dust cap, L.H. bearing	1	1	1	1	1	1
16	W1036	Felt washer, R.H. bearing	1	1	1	1	1	1
17	W1037	Distance piece, R.H. bearing	1	1	1	1	1	1
18	W1038	Dust cap, R.H. bearing	1	1	1	1	1	1
19	W1039	Sleeve, bearing and spindle	1	1	1	1	1	1
20	E398	Locknut, bearing and spindle sleeve	2	2	2	2	2	2
21	W1091	Sealing ring, driving flange and brake drum	1	1	1	1	1	1
22	W1040	Brake drum and sprocket 46T	1	1	1	1	1	1
23	W1143	Grease retainer, brake drum bearing	1	1	1	1	1	1
24	W1041	Bearing, brake drum	1	1	1	1	1	1
25	W1042	Felt washer, brake drum bearing	1	1	1	1	1	1
26	W1043	Retainer, brake drum bearing	1	1	1	1	1	1
27	W1044	Circlip, brake drum bearing retainer	1	1	1	1	1	1
28	W1045	Sleeve, brake drum bearing	1	1	1	1	1	1
29	W1135	Adjuster, rear wheel chain	2	2	2	2	2	2
30	W1015	End plate, rear wheel adjuster	2	2	2	2	2	2
31	W1058	Nut, rear wheel adjuster	2	2	2	2	2	2
32	W1052	Nut, bearing sleeve L.H.	1	1	1	1	1	1
33	W1053	Distance collar, spindle	1	1	1	1	1	1
34	W1170	Collar, spindle	1	1	1	1	1	1
35	W1055	Spindle	1	1	1	1	1	1
36	WM2	Bolt, tyre security	1	1	—	1	1	—
37	WM3	Bolt, tyre security	—	—	2	—	—	2
		REAR WHEEL BRAKE						
38	W1121	Plate, brake anchor	1	1	1	1	1	1
39	W1083	Cam, brake	1	1	1	1	1	1
40	W1090	Return spring, brake lever	1	1	1	1	1	1
41	SI-52	Nut, brake lever	1	1	1	1	1	1
42	W1085	Lever, brake	1	1	1	1	1	1
43	W93	Shoe, rear brake c/w lining	2	2	2	2	2	2
44	NW243	Lining, rear brake shoe	2	2	2	2	2	2
45	W129	Rivet, rear brake shoe	16	16	16	16	16	16
46	W135	Spring, rear brake shoe	2	2	2	2	2	2
47	DS47	Nut, torque stay securing	1	1	1	1	1	1
48	PCW73A	Washer, torque stay nut	1	1	1	1	1	1

** Supplied complete with nipple*

REF. No.	PART No.	DESCRIPTION	5T	6T	TR5	T100	T110	TR6

MUDGUARD—GROUP 16

FRONT MUDGUARD

1	H566	Mudguard assembly, less front stays	1	1	—	1	1	—
2	H716	Blade only, front mudguard	—	—	1	—	—	1
3	H569	Stay, front mudguard	2	2	—	2	2	—
4	H719	Stay, front mudguard	—	—	1	—	—	1
5	H532	Clip, front mudguard stay	—	—	2	—	—	2
6	H533	Backing strip, clip	—	—	2	—	—	2
7	DS57	Bolt, stay to mudguard $\frac{7}{16}$" U/H	2	2	4	2	2	4
8	E1612	Washer, stay to mudguard bolt	2	2	4	2	2	4
9	F879	Nut, stay to mudguard bolt	2	2	4	2	2	4
10	H427	Bridge, mudguard support	1	1	—	1	1	—
11	H717	Bridge, mudguard support	—	—	1	—	—	1
12	H532	Clip, mudguard support bridge	—	—	2	—	—	2
13	H533	Backing strip, clip	—	—	2	—	—	2

INDEX FIG. 21

Illust. No.	*Part No.*	*Page No.*	*Ref. No.*	*Illust. No.*	*Part No.*	*Page No.*	*Ref. No.*
1	H566	68	1	16	F3629	70	20
2	H716	68	2	17	F3685	70	21
3	H569	68	3	18	F3896	70	32
4	H719	68	4	19	DS57	70	33
5	H532	68	5	20	F879	70	34
6	H533	68	6	21	F2698	71	1
7	DS57	68	7	22	F2996	71	2
8	F879	68	9	23	F879	71	5
9	H427	68	10	24	S26-2	71	7
10	H717	68	11	25	H251	71	8
11	H532	66	12	26	F3363	71	9
12	H533	68	13	27	F929	71	10
13	DS57	70	1	28	S1-51	71	11
14	F879	70	3	29	F1369	71	13
15	H768	70	15	30	F879	71	15

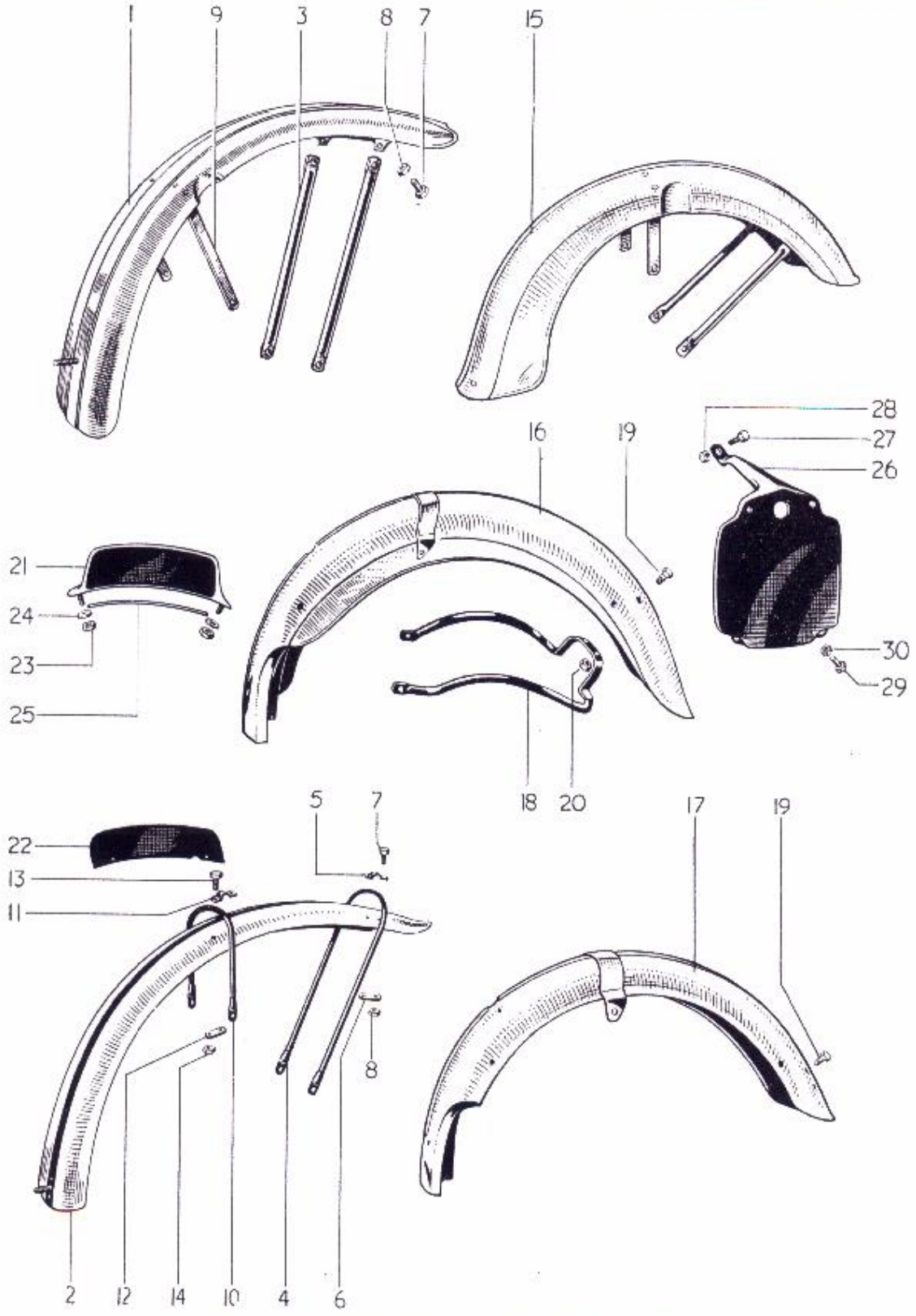

FIG. 21. FRONT AND REAR MUDGUARDS

GROUP 16 – MUDGUARD

REF. No.	PART No.	DESCRIPTION	5T	6T	TR5	T100	T110	TR6
1	DS57	Bolt, bridge to mudguard $\frac{7}{16}$" U/H	—	—	4	—	—	4
2	E1612	Washer, bridge to mudguard bolt	—	—	4	—	—	4
3	F879	Nut, bridge to mudguard bolt...	—	—	4	—	—	4
4	H428	Clip, support bridge to fork	2	2	2	2	2	2
5	H426	Bolt, support bridge to fork L.H. $\frac{33}{32}$" U/H ...	1	1	—	1	1	—
6	F1031	Bolt, support bridge to fork L.H. $\frac{15}{16}$" U/H ...	—	—	1	—	—	1
7	H.1090	Bolt, support bridge to fork R.H.	1	1	1	—	—	—
8	H451	Bolt, support bridge to fork R.H. $1\frac{1}{8}$" U/H ...	—	—	—	1	1	—
9	H622	Bolt, support bridge to fork R.H. $1\frac{11}{32}$" U/H	—	—	—	—	—	1
10	PO172A	Nut, clip bolt	2	2	2	2	2	2
11	S26-1	Washer, clip bolt nut	2	2	2	2	2	2
12	F929	Bolt, mudguard stay to fork end $\frac{1}{2}$" U/H ...	2	2	—	2	2	—
13	F2335	Bolt, mudguard stay to fork end $\frac{11}{16}$" U/H ...	—	—	2	—	—	2
14	S26-3	Washer, mudguard stay to fork end	2	2	2	2	2	2

FRONT MUDGUARD (VALANCED) Alternative Equipment

15	H768	Valanced front mudguard assembly c/w front stays	1	1	—	1	1	—
16	DS57	Bolt, licence holder securing $\frac{7}{16}$" U/H ...	1	1	—	1	1	—
17	S25-1	Washer, licence holder securing bolt ...	1	1	—	1	1	—
18	F879	Nut, licence holder securing bolt	1	1	—	1	1	—

LICENCE HOLDER

19	D261	Licence holder, etc.	1	1	1	1	1	1

REAR MUDGUARD

20	F3629	Mudguard assembly, complete	1	1	—	1	1	—
21	F3685	Mudguard assembly, complete	—	—	1	—	—	1
22	F3599	Bracket, mudguard to rear engine plates ...	1	1	1	1	1	1
23	F2335	Bolt, mudguard bracket to rear engine plates $\frac{11}{16}$" U/H	2	2	2	2	2	2
24	SI-51	Nut, mudguard bracket bolt	2	2	2	2	2	2
25	S26-3	Washer, mudguard bracket bolt	2	2	2	2	2	2
26	DS57	Bolt, mudguard to bracket $\frac{7}{16}$" U/H ...	2	2	2	2	2	2
27	F879	Nut, mudguard to bracket bolt	2	2	2	2	2	2
28	S26-2	Washer, mudguard to bracket bolt	2	2	2	2	2	2
29	F3632	Bolt, mudguard to frame $1\frac{9}{16}$" U/H ...	2	2	2	2	2	2
30	SI-51	Nut, mudguard to frame bolt	2	2	2	2	2	2
31	S26-3	Washer, mudguard to frame bolt	2	2	2	2	2	2
32	F3896	Lifting handle, rear	1	1	1	1	1	1
33	DS57	Bolt, lifting handle to mudguard $\frac{7}{16}$" U/H	2	2	2	2	2	2
34	F879	Nut, lifting handle bolt	2	2	2	2	2	2
35	S26-2	Washer, lifting handle bolt	2	2	2	2	2	2
36	D324	Mudflap, rubber	A	A	A	A	A	A

NUMBER PLATE—GROUP 17

FRONT NUMBER PLATE

REF. No.	PART No.	DESCRIPTION	5T	6T	TR5	T100	T110	TR6
1	F2698	Plate assembly, number	1	1	—	1	1	—
2	F2996	Plate number	—	—	1	—	—	1
3	H741	Clip, plate to mudguard c/w nut and bolt ...	—	—	2	—	—	2
4	H687	Screw, plate to clip $\frac{3}{8}$" U/H	—	—	2	—	—	2
5	F879	Nut, plate stud	2	2	—	2	2	—
6	H745	Nut, plate clip screw	—	—	2	—	—	2
7	S26-2	Washer, stud	2	2	—	2	2	—
8	H251	Beading, plate (rubber)	1	1	—	1	1	—

REAR NUMBER PLATE

9	F3363	Plate, rear number	1	1	1	1	1	1
10	F929	Bolt, rear number plate top $\frac{1}{2}$" U/H ...	1	1	1	1	1	1
11	SI-51	Nut, rear number plate top bolt	1	1	1	1	1	1
12	S26-3	Washer, number plate top bolt	1	1	1	1	1	1
13	F1369	Bolt, rear number plate bottom $\frac{5}{8}$" U/H ...	2	2	2	2	2	2
14	S26-2	Washer, bottom bolt nut	2	2	2	2	2	2
15	F879	Nut, bottom bolt	2	2	2	2	2	2
16	D68	Transfer, number plate (gold and white) ...	1	1	1	1	1	1

PETROL AND OIL TANK—GROUP 18

PETROL TANK (ALWAYS STATE COLOUR REQUIRED)

17	F.4115	Tank, petrol (4 gallons)	1	1	—	1	1	—
18	F.4116	Tank, petrol (3 gallons)	—	—	1	A	A	1
19	F.4148	Styling strip, L.H. front	1	1	—	1	1	—
20	F.4151	Styling strip, R.H. front	1	1	—	1	1	—
21	F.4146	Styling strip, L.H. rear	1	1	—	1	1	—
22	F.4149	Styling strip, R.H. rear	1	1	—	1	1	—
23	F.4235	Styling strip, L.H. front	—	—	1	A	A	1
24	F.4237	Styling strip, R.H. front	—	—	1	A	A	—
25	F.4236	Styling strip, L.H. rear	—	—	1	A	A	1
26	F.4238	Styling strip, R.H. rear	—	—	1	A	A	1
27	F.4127	Styling unit, L.H.	1	1	1	1	1	1
28	F.4128	Styling unit, R.H.	1	1	1	1	1	1
29	F.4129	Screw, unit securing (·435" U/H)	4	4	4	4	4	4
30	F.3220	Cap, tank filler	1	1	—	1	1	—
31	F.3219	Cap, tank filler c/w jack chain	—	—	1	—	—	1
32	F.4048	Washer, cap joint	1	1	1	1	1	1

GROUP 18 – PETROL AND OIL TANK

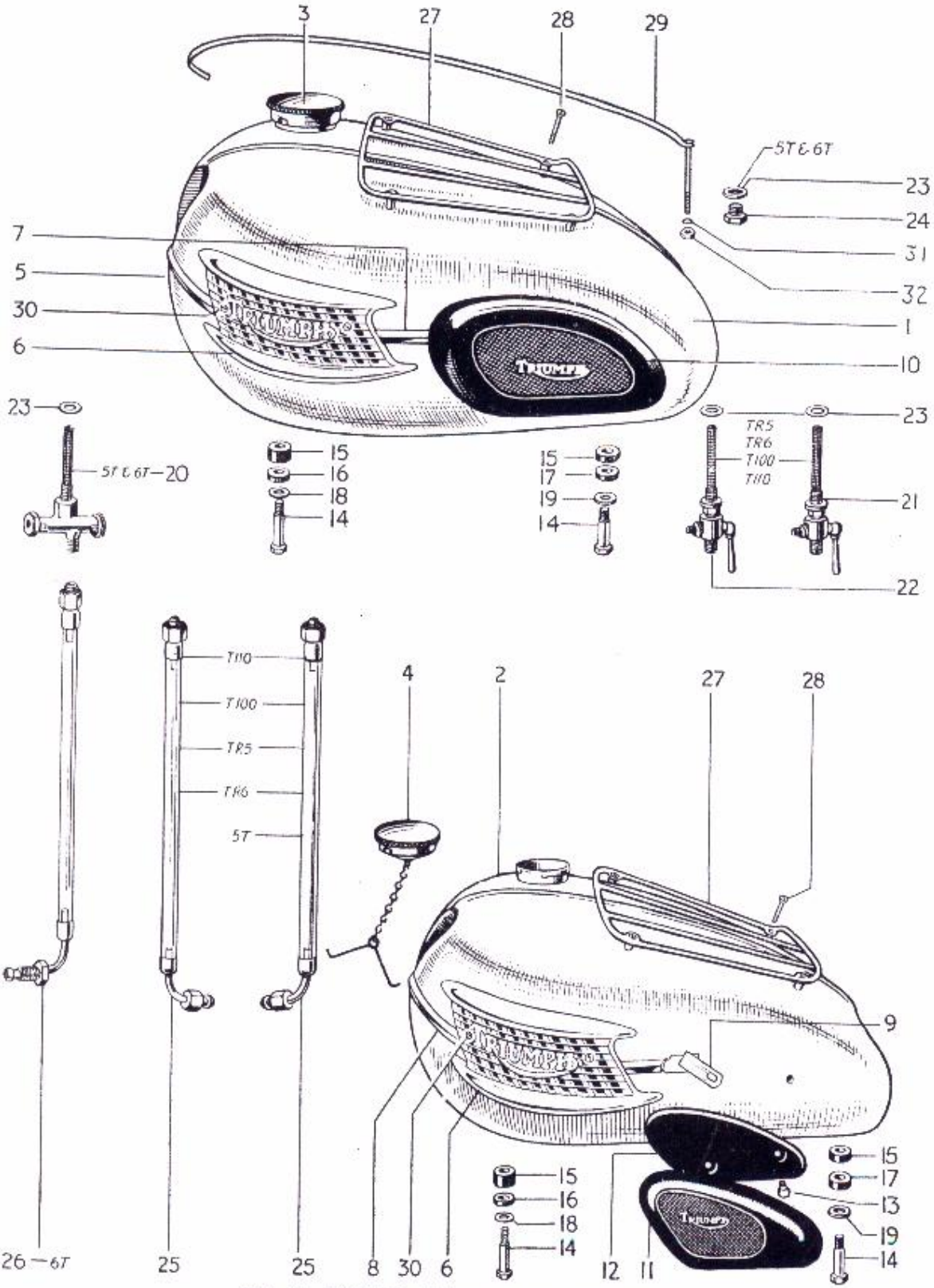

FIG. 22. PETROL TANKS AND FITTINGS

PETROL AND OIL TANK – GROUP 18

REF. No.	PART No.	DESCRIPTION	5T	6T	TR5	T100	T110	TR6
1	F3967	Band, centre styling	1	1	1	1	1	1
2	F4019	Washer, shakeproof	1	1	1	1	1	1
3	H919	Nut, band fixing tag	1	1	1	1	1	1
4	F2551	Pad, knee grip L.H.	1	1	—	1	1	—
5	F2552	Pad, knee grip R.H.	1	1	—	1	1	—
6	F1606	Pad, knee grip L.H. (Export Tigers)	—	—	1	A	A	1
7	F1605	Pad, knee grip R.H. (Export Tigers)	—	—	1	A	A	1
8	F3915	Plate, knee grip insert L.H. (Export Tigers)...	—	—	1	A	A	1
9	F3916	Plate, knee grip insert R.H. (Export Tigers)...	—	—	1	A	A	1
10	F1953	Screw, knee grip pad $\frac{3}{8}$" U/H	4	4	—	4	4	—
11	T361	Bolt, knee grip pad	—	—	4	A	A	4
12	S25-13	Washer, knee grip bolt	—	—	4	A	A	4
13	F1808	Bolt petrol tank fixing 1$\frac{1}{16}$" U/H	4	4	4	4	4	4
14	F.1813	Washer, rubber (upper)	4	4	4	4	4	4
15	F.967	Washer, rubber (lower front)	2	2	2	2	2	2
16	F.3815	Washer, rubber spigotted (rear)	2	2	2	2	2	2
17	S25-27	Washer, plain	4	4	4	4	4	4
18	F1717	Tap, petrol feed	1	1	—	—	—	—
19	F3057	Tap, petrol feed L.H.	—	—	1	1	1	1
20	F3116	Tap, petrol feed R.H. (reserve)	—	—	1	1	1	1
21	F1511	Washer, petrol tap and plug	2	2	2	2	2	2
22	F3329	Plug, petrol tank...	1	1	—	—	—	—
23	F3672	Pipe, petrol feed	1	—	2	2	2	2
24	F3332	Pipe, petrol feed	—	1	—	—	—	—

INDEX FIG. 22

Illust. No.	*Part No.*	*Page No.*	*Ref. No.*	*Illust. No.*	*Part No.*	*Page No.*	*Ref. No.*
1	F.4115	71	17	17	F.3815	73	16
2	F.4116	71	18	18	S.25-27	73	17
3	F.3220	71	30	19	S.25-27	73	17
4	F.3219	71	31	20	F.1717	73	18
5	F.4148	71	19	21	F.3116	73	20
6	F.4127	71	27	22	F.3057	73	19
7	F.4146	71	21	23	F.1511	73	21
8	F.4235	71	23	24	F.3329	37	22
9	F.4236	71	25	25	F.3672	73	23
10	F.2551	73	4	26	F.3332	73	24
11	F.1606	73	6	27	F.3917	74	1
12	F.3915	73	8	28	F.2936	74	2
13	T.361	73	11	29	F.3967	73	1
14	F.1808	73	13	30	F.4129	71	29
15	F.1813	73	14	31	F.4019	73	2
16	F.967	73	15	32	H.919	73	3

GROUP 18 – PETROL AND OIL TANK
GROUP 19 – CHAINGUARD

REF. No.	PART No.	DESCRIPTION	5T	6T	TR5	T100	T110	TR6
		TANK PARCEL GRID						
1	F3917	Grid, tank parcel	1	1	1	1	1	1
2	F2936	Screw, tank parcel grid	4	4	4	4	4	4
3	*F3026	Plug, petrol tank	4	4	4	4	4	4
		**To replace F2936 when grid is not fitted.*						
		OIL TANK						
4	F3856	Tank, oil	1	1	1	1	1	—
5	F3658	Cap, oil tank filler	1	1	—	1	1	—
6	F3796	Cap, oil tank filler c/w jack chain	—	—	1	—	—	1
7	F3217/21	Jack chain, filler cap	—	—	1	—	—	1
8	E1792	Plug, oil tank drain	1	1	1	1	1	1
9	PT104B	Washer, oil tank drain plug	1	1	1	1	1	1
10	T1203	Pipe, oil tank vent (flexible)	1	1	1	1	1	1
11	F3641	Stud, oil tank to seat tube $\frac{13}{16}$" O/A	1	1	1	1	1	1
12	F1008	Nut, oil tank to stud	1	1	1	1	1	1
13	S26-3	Washer, oil tank stud nut	1	1	1	1	1	1
14	F1213	Bolt, tank to backstay bracket $\frac{11}{16}$" U/H	1	1	1	1	1	1
15	S1-51	Nut, backstay bracket bolt	1	1	1	1	1	1
16	S26-3	Washer, backstay bolt nut	1	1	1	1	1	1
17	F3179	Filter, oil tank	1	1	1	1	1	1
18	F1713	Washer, oil tank filter	1	1	1	1	1	1
19	F3655	Pipe, top half oil feed	1	1	1	1	1	1
20	F3182	Union nut, feed pipe	1	1	1	1	1	1
21	E3353	Pipe, oil feed (flexible)	1	1	1	1	1	1
22	E3354	Pipe, oil return (flexible)	1	1	1	1	1	1
23	E3355	Junction block, oil pipes to engine	1	1	1	1	1	1
24	E1529	Washer, oil pipe block joint	1	1	1	1	1	1
25	S1-51	Nut, oil pipe block securing	1	1	1	1	1	1
26	S25-3	Washer, oil pipe block securing nut	1	1	1	1	1	1

For securing bolt, nut and washer, oil tank to rear engine plates, see Rear Mudguard Group page 70.

CHAINGUARD—GROUP 19

		REAR CHAINGUARD						
27	F.4130	Chainguard	1	1	—	1	1	—
28	F.4138	Chainguard	—	—	1	—	—	1
29	F.4134	Bracket, front	1	1	1	1	1	1
30	DS57	Bolt, chainguard front $\frac{7}{16}$" U/H	1	1	1	1	1	1
31	S26-2	Washer, chainguard bolt	1	1	1	1	1	1
32	F.4135	Bolt, pivot (stepped)	1	1	1	1	1	1
33	F.2277	Washer, thackeray	1	1	1	1	1	1
34	S.25-13	Washer	1	1	1	1	1	1
35	F.879	Nut	1	1	1	1	1	1
36	F.4140	Bracket, centre	—	—	1	—	—	1
37	DS.57	Bolt, bracket and torque stay	—	—	2	—	—	2
38	S.26-2	Washer, spring	—	—	1	—	—	1
39	F.879	Nut	—	—	1	—	—	1
40	F.4136	Bolt, chainguard rear (stepped)	1	1	1	1	1	1
41	S.25-3	Washer	1	1	1	1	1	1
42	S.1-51	Nut	1	1	1	1	1	1

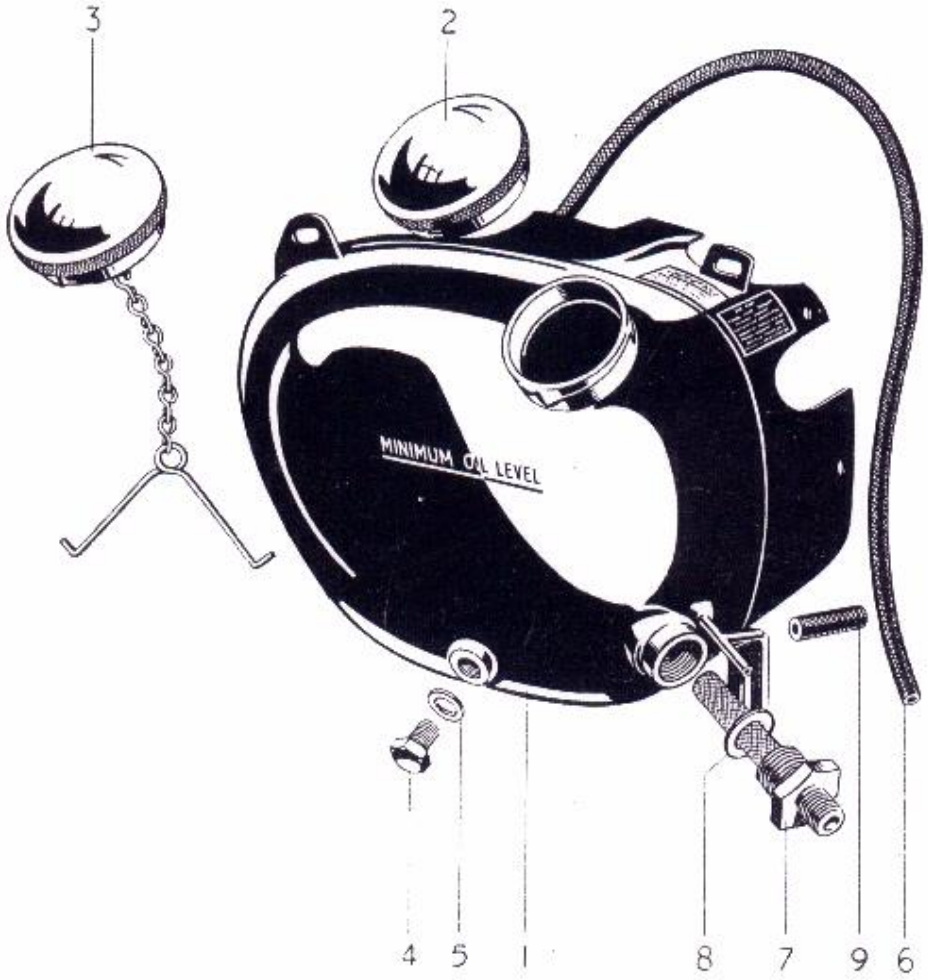

FIG. 23. OIL TANK

INDEX FIG. 23

Illust. No.	Part No.	Page No.	Ref. No.	Illust. No.	Part No.	Page No.	Ref. No.
1	F3856	74	4	6	T1203	74	10
2	F3658	74	5	7	F3179	74	17
3	F3796	74	6	8	F1713	74	18
4	E1792	74	8	9	E3383	35	9
5	PT104B	74	9				

PRIMARY CHAINCASE—GROUP 20

REF. No.	PART No.	DESCRIPTION	5T	6T	TR5	T100	T110	TR6
1	T1232	Cover, chaincase outer	1	—	—	—	—	—
2	T1237	Cover, chaincase outer	—	1	—	—	—	—
3	T1190	Cover, chaincase outer	—	—	1	1	1	1
4	T1231	Cover, chaincase inner	1	1	—	—	—	—
5	T1186	Cover, chaincase inner	—	—	1	1	1	1
6	T1059	Sleeve, chaincase inner (Rubber)	1	1	—	—	—	—
7	NT367	Plug, chaincase oil filler	1	1	1	1	1	1
8	NT376	Washer, chaincase oil filler plug	1	1	1	1	1	1
9	PCE102F	Plug, chaincase oil drain	1	1	1	1	1	1
10	WE170	Washer, chaincase oil drain plug	1	1	1	1	1	1
11	NT316	Dowel, chaincase to footrest	2	2	2	2	2	2
12	T1381	Plate, chaincase oil retainer	1	1	1	1	1	1
13	T91	Plate, chaincase oil retainer spring	1	1	1	1	1	1
14	T177A	Rivet, chaincase oil retainer plate	2	2	2	2	2	2
15	T496	Adjuster, rear chain oiler	1	1	1	1	1	1
16	T497	Spring, rear chain oiler	1	1	1	1	1	1
17	T1226	Washer, chaincase joint...	1	1	—	—	—	—
18	T1189	Washer, chaincase joint...	—	—	1	1	1	1
19	E3437	Screw, chaincase cover (short) $\frac{13}{16}$" U/H ...	11	11	8	8	8	8
20	E3441	Screw, chaincase cover (long) $1\frac{13}{16}$" U/H ...	—	—	3	3	3	3
21	E3444	Screw, chaincase cover (front) $2\frac{1}{2}$" U/H ...	4	4	—	—	—	—
22	T.1477	Washer, chaincase to crankcase joint ...	1	1	1	1	1	1

INDEX FIG. 24

Illust. No.	*Part No.*	*Page No.*	*Ref. No.*	*Illust. No.*	*Part No.*	*Page No.*	*Ref. No.*
1	T1232	76	1	11	PCE102F	76	9
	T1237	76	2	12	WE170	76	10
2	T1190	76	3	13	NT316	76	11
3	E3447	104	4	14	T1381	76	12
4	E3448	104	5	15	T91	76	13
5	E3444	76	21	16	T496	76	15
6	T1226	76	17	17	T497	76	16
7	T1231	76	4	18	T1189	76	18
8	T1186	76	5	19	E3437	76	19
9	NT367	76	7	20	E3441	76	20
10	NT376	76	8				

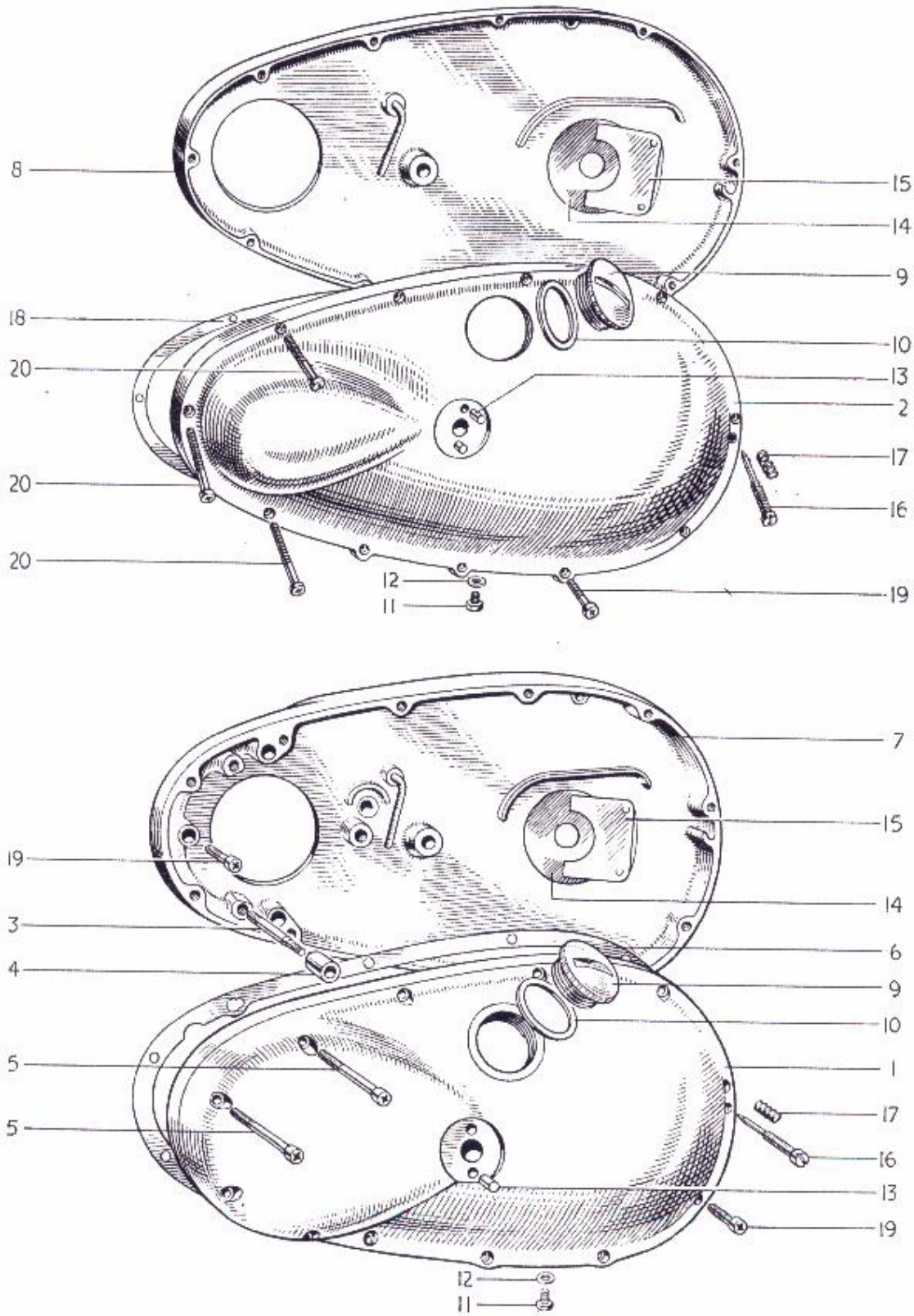

FIG. 24. PRIMARY CHAINCASE

REF. No.	PART No.	DESCRIPTION	5T	6T	TR5	T100	T110	TR6

HANDLEBAR—GROUP 21

HANDLEBAR

1	H1004	Handlebar, complete with all controls ...	1	1	—	—	—	—
2	H1002	Handlebar, complete with all controls ...	—	—	1	—	—	1
3	H1005	Handlebar, complete with all controls ...	—	—	—	1	1	—
4	H1009	Handlebar, bend only	1	1	—	1	1	—
5	H1003	Handlebar, bend only	—	—	1	—	—	1
6	H230	Grip, handlebar L.H. rubber	1	1	1	1	1	1

FOR U.S.A. AND CANADIAN PATTERN SEE PAGE 82.

THROTTLE CONTROL

7	H697	Twistgrip, assembly	1	1	1	1	1	1
8	H230	Grip, twistgrip rubber	1	1	1	1	1	1
9	H698	Head, assembly, twistgrip	1	1	1	1	1	1
10	H685	Spring, twistgrip friction screw	1	1	1	1	1	1
11	H665	Screw, twistgrip friction adjuster	1	1	1	1	1	1
12	H686	Spring, twistgrip friction	1	1	1	1	1	1
13	H234	Thimble, twistgrip cable	1	1	1	1	1	1
14	H237	Grubscrew, twistgrip	1	1	1	1	1	1
15	H700	Sleeve assembly, twistgrip	1	1	1	1	1	1
16	H233	Plate, sleeve retaining	2	2	2	2	2	2
17	H232	Circlip, sleeve retaining	1	1	1	1	1	1

INDEX FIG. 25

Illust. No.	*Part No.*	*Page No.*	*Ref. No.*	*Illust. No.*	*Part No.*	*Page No.*	*Ref. No.*
1	H1009	78	4		18/794	80	11
	H1003	78	5	9	18/500	80	14
	H1010	82	19	10	H668	80	15
	H1014	82	20	11	61/004	80	16
2	H230	78	6	12	18/087	80	17
3	H698	78	9	13	18/053	80	18
4	H234	78	13	14	18/547	80	1
5	H700	78	15		18/772	80	2
6	H233	78	16	15	H689	101	24
7	H232	78	17	16	51563A	101	22
8	18/787	80	10				

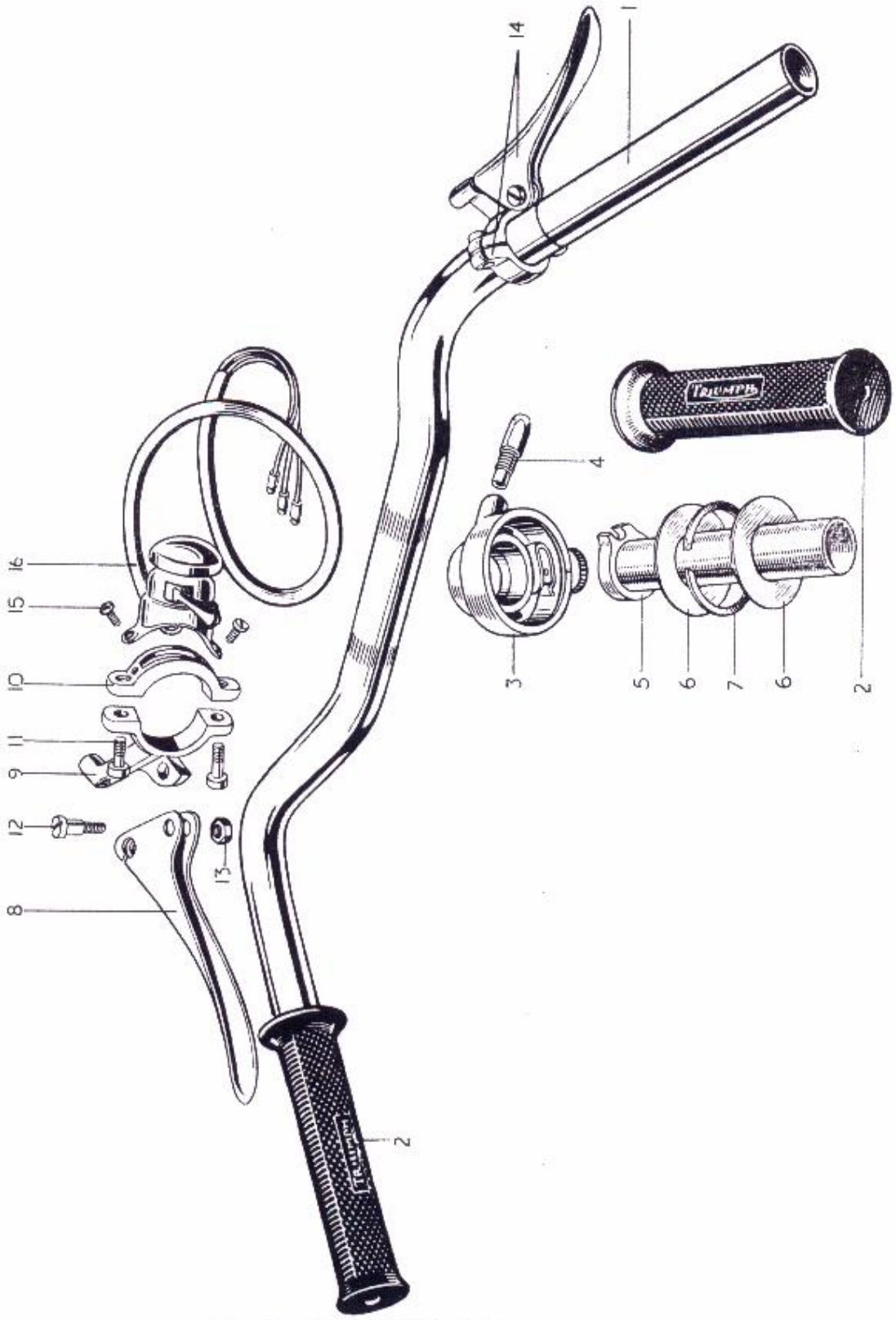

FIG. 25. HANDLEBAR AND CONTROLS

GROUP 21 – HANDLEBAR

REF. No.	PART No.	DESCRIPTION	5T	6T	TR5	T100	T110	TR6	REF.
		FRONT BRAKE CONTROL							
1	18/547	Lever assembly, front brake	1	1	—	1	1	—	1
2	18/772	Lever assembly, front brake (Ball-ended) ...	—	—	1	—	—	1	2
3	18/535	Lever only	1	1	—	1	1	—	3
4	18/754	Lever only (Ball-ended)	—	—	1	—	—	1	4
5	18/174	Bracket, lever fulcrum	1	1	1	1	1	1	5
6	12/044	Clamp, lever bracket	1	1	+	1	1	1	6
7	11/014	Screw, lever bracket to clamp	2	2	2	2	2	2	7
8	18/087	Screw, lever fulcrum	1	1	1	1	1	1	8
9	18/053	Nut, lever fulcrum screw	1	1	1	1	1	1	
		CLUTCH CONTROL							9
10	18/787	Lever assembly, clutch	1	1	—	1	1	—	10
11	18/794	Lever assembly clutch (Ball-ended)	—	—	1	—	—	1	11
12	18/528	Lever only	1	1	—	1	1	—	12
13	18/752	Lever only (Ball-ended)	—	—	1	—	—	1	13
14	18/500	Bracket, lever fulcrum	1	1	1	1	1	1	14
15	H668	Clamp, lever bracket	1	1	1	1	1	1	15
16	61/004	Screw, lever bracket to clamp	2	2	2	2	2	2	16
17	18/087	Screw, lever fulcrum	1	1	1	1	1	1	17
18	18/053	Nut, lever fulcrum screw	1	1	1	1	1	1	18
		AIR CONTROL							19
19	12/578	Lever assembly air control	1	—	—	1	1	—	20
20	12/163	Lever assembly air control (chrome)	—	—	1	—	—	1	21
21	12/016B	Lever only	1	—	—	1	1	—	22
22	12/016	Lever only	—	—	1	—	—	1	23
23	12/029	Bolt, centre	1	—	1	1	1	1	24
24	12/031	Cap	1	—	1	1	1	1	25
25	12/033	Washer, centre spring	1	—	1	1	1	1	26
26	11/014	Screw, clip fixing	2	—	2	2	2	2	27
27	12/044	Clip, fixing	1	—	1	1	1	1	28
		MAGNETO CONTROL							29
28	12/173	Lever assembly, magneto control	—	—	1	—	—	1	30
29	12/162	Lever assembly, magneto control	—	—	—	1	1	—	31
30	12/017	Lever only	—	—	1	—	—	1	32
31	12/014	Lever only	—	—	—	1	1	—	33
32	12/029	Bolt, centre	—	—	1	1	1	1	34
33	12/031	Cap centre	—	—	1	1	1	1	35
34	12/033	Washer, spring	—	—	1	1	1	1	36
35	11/014	Screw, clip fixing	—	—	2	2	2	2	37
36	12/044	Clip, fixing	—	—	1	1	1	1	38
									39
									40
									41
									42
									43
									44
									45

CONTROL CABLE—GROUP 22

TR6	REF. No.	PART No.	DESCRIPTION	5T	6T	TR5	T100	T110	TR6
			CLUTCH CABLE						
—	1	D307X	Cable assembly clutch	1	1	1	1	1	1
1	2	D307W	Wire only, clutch	1	1	1	1	1	1
—	3	D307C	Casing only, clutch	1	1	1	1	1	1
1	4	D103	Ferrule, clutch casing	2	2	2	2	2	2
1	5	D81	Nipple, wire (handlebar end)	1	1	1	1	1	1
1	6	DS73	Nipple, wire (gearbox end)	1	1	1	1	1	1
2	7	DS74	Adjuster, clutch cable	1	1	1	1	1	1
1	8	W76	Locknut, clutch cable adjuster	1	1	1	1	1	1
1									
			FRONT BRAKE CABLE						
	9	D.349	Cable assembly, brake	1	1	—	—	—	—
—	10	D.351	Cable assembly, brake	—	—	1	—	—	—
1	11	D.305	Cable assembly, brake	—	—	—	1	1	—
—	12	D.345	Cable assembly, brake	—	—	—	—	—	1
1	13	D.349W	Wire only, brake	1	1	—	—	—	—
—	14	D.351W	Wire only, brake	—	—	1	—	—	—
1	15	D.305W	Wire only, brake	—	—	—	1	1	—
1	16	D.345W	Wire only, brake	—	—	—	—	—	1
1	17	D.349C	Casing only, brake	1	1	—	—	—	—
2	18	D.351C	Casing only, brake	—	—	1	—	—	—
1	19	D.305C	Casing only, brake	—	—	—	1	1	—
1	20	D.345C	Casing only, brake	—	—	—	—	—	1
	21	D.103	Ferrule, brake casing	2	2	2	2	2	2
	22	H.751	Ferrule, brake casing (rubber)	1	1	—	1	1	—
	23	H.707	Sleeve, brake casing (rubber)	1	1	—	1	1	—
	24	D.81	Nipple, wire at handlebar	1	1	1	1	1	1
—	25	W.593	Fork end, wire	1	1	1	1	1	1
1	26	H.1089	Tube, lower cover	1	1	—	—	—	—
—	27	H.446B	Tube, lower cover	—	—	—	1	1	—
1	28	H.447	Ferrule, cover tube	1	1	—	1	1	—
1	29	W.328A	Adjuster, brake cable	1	1	1	1	1	1
1	30	W.591	Abutment, at brake plate	—	—	—	1	1	1
1	31	W.1261	Thumb nut, cable adjuster	1	1	1	1	1	1
2									
1			**THROTTLE CABLE**						
	32	D224	Cable assembly, throttle	1	—	1	1	1	1
	33	D269	Cable assembly, throttle	—	1	—	—	—	—
	34	D224W	Wire only, throttle	1	—	1	1	1	1
	35	D269W	Wire only, throttle	—	1	—	—	—	—
1	36	D224C	Casing only, throttle	1	—	1	1	1	1
—	37	D269C	Casing only, throttle	—	1	—	—	—	—
1	38	H670	Guide tube, throttle wire	1	1	1	1	1	1
—	39	D101	Ferrule, throttle casing	3	2	3	3	3	3
1	40	D83	Nipple, throttle wire (handlebar end) ...	1	1	1	1	1	1
1	41	NS191	Nipple, throttle wire (carburetter end) ...	1	1	1	1	1	1
1	42	D104	Adjuster, throttle casing	1	—	1	1	1	1
2	43	D267	Adjuster throttle casing	—	1	—	—	—	—
1	44	D268	Nut, throttle casing adjuster	—	2	—	—	—	—
	45	D271	Spring, throttle lever return	—	1	—	—	—	—

GROUP 22 – CONTROL CABLE
GROUP 23 – OVERSEAS HANDLEBAR

REF. No.	PART No.	DESCRIPTION	5T	6T	TR5	T100	T110	TR6	REF
		AIR CABLE							
1	D329	Cable assembly, air	1	—	—	1	1	—	1
2	D242	Cable assembly, air	—	—	1	—	—	1	2
3	D329W	Wire only, air	1	—	—	1	1	—	3
4	D242W	Wire only, air	—	—	1	—	—	1	4
5	D329C	Casing only, air	1	—	—	1	1	—	5
6	D242C	Casing only, air	—	—	1	—	—	1	6
7	D101	Ferrule, air casing	2	—	2	2	2	2	7
8	D83	Nipple, air wire (handlebar end)	1	—	1	1	1	1	8
9	NS191	Nipple, air wire (carburetter end)	1	—	1	1	1	1	9
		IGNITION CABLE							
10	D100	*Cable assembly, ignition	—	—	1	1	1	1	10
11	D100W	Wire only, ignition	—	—	1	1	1	1	11
12	D100C	Casing only, ignition	—	—	1	1	1	1	12
13	D101	Ferrule, ignition casing	—	—	2	2	2	2	
14	D83	Nipple, ignition wire (Handlebar end)	—	—	1	1	1	1	
15	XA69	Clip, cables to frame, etc.	as required						

**Magneto end fittings supplied by Messrs. Lucas Ltd.*

HANDLEBAR—GROUP 23

U.S.A. AND CANADIAN PATTERN

16	H1006	Handlebar, complete with all controls	1	1	—	—	—	—	13
17	H1007	Handlebar, complete with all controls	—	—	—	1	1	—	14
18	H1013	Handlebar, complete with all controls	—	—	1	—	—	1	15
19	H1010	Handlebar, bend only	1	1	—	1	1	—	16
20	H1014	Handlebar, bend only	—	—	1	—	—	1	17
21	D350	Cable assembly, brake	1	1	—	—	—	—	18
22	D352	Cable assembly, brake	—	—	1	—	—	—	19
23	D309	Cable assembly, brake	—	—	—	1	1	—	20
24	D346	Cable assembly, brake	—	—	—	—	—	1	
25	D257	Cable assembly, throttle	1	—	—	1	1	—	21
26	D272	Cable assembly, throttle (not U.S.)	—	1	—	—	—	—	22
27	D260	Cable assembly, ignition	—	—	1	1	1	1	23
28	D306	Cable assembly, clutch	1	1	1	1	1	1	24
									25

TR6	REF. No.	PART No.	DESCRIPTION	5T	6T	TR5	T100	T110	TR6

REAR BRAKE CONTROL—GROUP 24

1	F3595	Pedal, rear brake	1	1	1	1	1	1
2	F867	Spindle, rear brake pedal	1	1	1	1	1	1
3	DS48	Nut, rear brake spindle to frame	1	1	1	1	1	1
4	SCZ45	Washer, rear brake spindle to frame	1	1	1	1	1	1
5	SI-52	Nut, pedal spindle	1	1	1	1	1	1
6	S25-2	Washer, pedal spindle (plain)	1	1	1	1	1	1
7	S26-16	Washer, pedal spindle (spring)	1	1	1	1	1	1
8	F3597	Rod, brake operating	1	1	1	1	1	1
9		$\frac{1}{16}$" × $\frac{1}{2}$" Split pin	1	1	1	1	1	1
10	S25-13	Washer, brake rod for split pin	1	1	1	1	1	1
11	W11	Pivot roller, brake arm to rod	1	1	1	1	1	1
12	F3667	Thumb nut, brake rod adjusting	1	1	1	1	1	1

FOOTREST—GROUP 25

13	F3593	Footrest, R.H.	1	1	1	1	1	1
14	F987	Footrest, L.H.	1	1	1	1	1	1
15	NF704	Rubber, footrest	2	2	2	2	2	2
16	F3592	Rod, footrest	1	1	1	1	1	1
17	DS48	Nut, footrest rod	2	2	2	2	2	2
18	NT316	Dowel, footrest R.H.	4	4	4	4	4	4
19	F862	Distance tube, engine plate	1	1	1	1	1	1
20	T87	Distance tube, L.H. footrest	1	1	1	1	1	1

PILLION FOOTREST

21	F1694	Pedal, footrest	2	2	2	2	2	2
22	F1695	Rubber, footrest pedal	2	2	2	2	2	2
23	F2271	Bolt, footrest pedal pivot $\frac{5}{16}$" U/H	2	2	2	2	2	2
24	SI-51	Nut, footrest pedal pivot bolt	2	2	2	2	2	2
25	F2277	Washer, footrest pedal pivot bolt	2	2	2	2	2	2

BATTERY CARRIER AND TOOLBOX—GROUP 26

BATTERY CASE AND TOOLBOX

REF. No.	PART No.	DESCRIPTION	5T	6T	TR5	T100	T110	TR6
1	F3870	Battery case and toolbox assembly	1	1	1	1	1	1
2	E534	Swivel, carrier strap plain	1	1	1	1	1	1
3	E535	Swivel, carrier strap tapped	1	1	1	1	1	1
4	E536	Bolt, carrier strap swivel 1 11/16" U/H ...	1	1	1	1	1	1
5	F3588	Strap, carrier top	1	1	1	1	1	1
6	F1668	Strap, carrier front	1	1	1	1	1	1
7	F1727	Pin, carrier strap hinge	2	2	2	2	2	2
8	F3874	Lid assembly, battery case	1	1	1	1	1	1
9	F3875	Fastener, lid	1	1	1	1	1	1
10	F3227	Grommet, lid fastener	1	1	1	1	1	1
11	F3641	Stud, carrier to seat tube boss 13/16" O/A ...	1	1	1	1	1	1
12	F1008	Nut, carrier to seat tube boss stud	1	1	1	1	1	1
13	S26-3	Washer, carrier to seat tube boss stud ...	1	1	1	1	1	1
14	F1699	Clip, battery case to frame	1	1	1	1	1	1
15	DS57	Bolt, battery case to frame clip 7/16" U/H ...	1	1	1	1	1	1
16	F879	Nut, battery case to frame clip	1	1	1	1	1	1
17	E1612	Washer, battery case to frame clip	1	1	1	1	1	1

For securing bolt, nut and washer, Toolbox/Battery case to rear engine plate, see Rear Mudguard Group, page 70.

DESPATCHING GOODS. Parts being returned to either the Distributor or Triumph Service Department for rectification should be well packed to avoid damage in transit. Cylinder barrels and cylinder heads are extremely vulnerable to breakage of the fins ; when casing, pack straw or old newspapers, etc., round the finning to prevent damage due to shock. Advice of despatch should be forwarded to the consignee and the sender MUST securely attach a label to the returned parts, clearly stating his name and address.

RECEIVING GOODS. Every possible precaution is taken to ensure that the sender's order has been correctly interpreted and the goods despatched are correct to the invoice. Parts sent in for repair are tested before despatch and are subsequently covered by our guarantee on Page 111. In the event of any shortage or damage in transit, we must be advised within 48 hours of arrival in order that the necessary action can be taken. No claim can be entertained after this period.

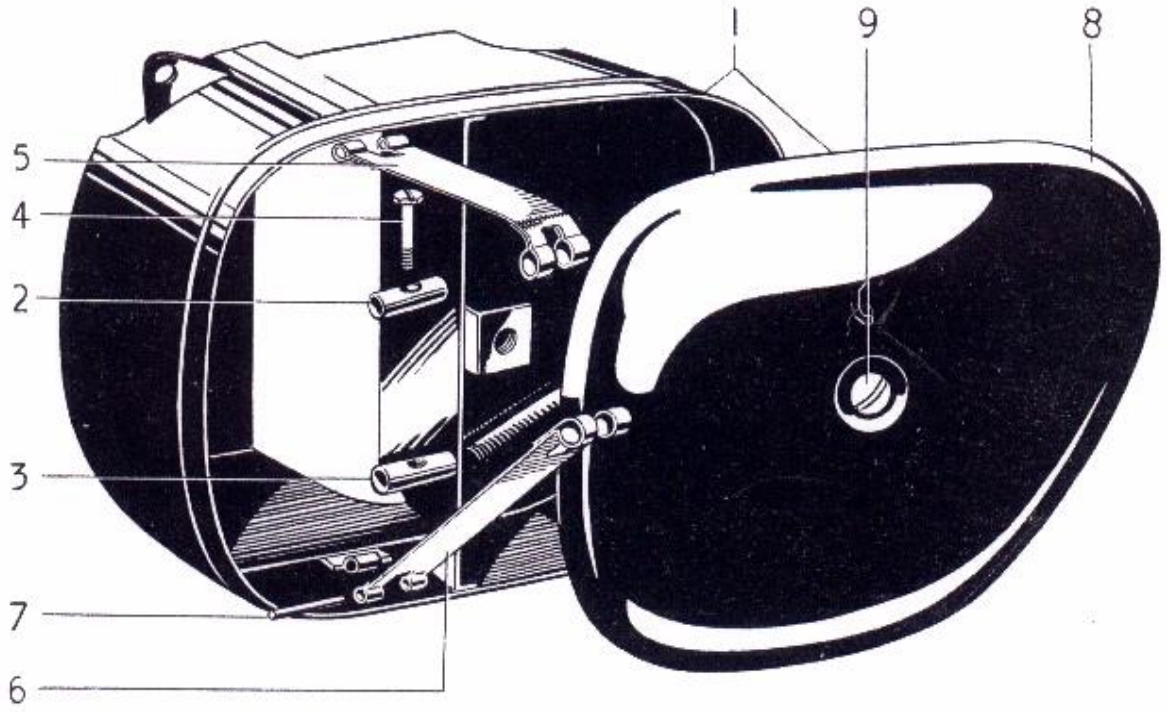

FIG. 26. BATTERY CARRIER AND TOOL BOX

INDEX FIG. 26

Illust. No.	Part No.	Page No.	Ref. No.	Illust. No.	Part No.	Page No.	Ref. No.
1	F3870	84	1	6	F1668	84	6
2	E534	84	2	7	F1727	84	7
3	E535	84	3	8	F3874	84	8
4	E536	84	4	9	F3875	84	9
5	F3588	84	5				

TOOLKIT—GROUP 27

REF. No.	PART No.	DESCRIPTION	5T	6T	TR5	T100	T110	TR6
1	D.365	Toolkit, complete	1	1	1	1	1	1
2	WA.58	Roll, canvas tool	1	1	1	1	1	1
3	D.360	Spanner, open $\frac{1}{8}$" × $\frac{5}{32}$" Whit.	1	1	1	1	1	1
4	D.361	Spanner, open $\frac{3}{16}$" × $\frac{1}{4}$" Whit.	1	1	1	1	1	1
5	NA.55	Spanner, open $\frac{1}{4}$" × $\frac{5}{16}$" Whit.	1	1	1	1	1	1
6	DA.16	Spanner, open $\frac{3}{8}$" × $\frac{7}{16}$" Whit.	1	1	1	1	1	1
7	PA.57	Spanner, closed $\frac{1}{2}$" × $\frac{9}{16}$" Whit.	1	1	1	1	1	1
8	D.311	Spanner, closed $\frac{5}{8}$" × $\frac{11}{16}$" Whit.	1	1	1	1	1	1
9	D.362	"C" Spanner and Tappet Key	1	1	1	1	1	1
10	D.87	Box spanner, plugs	1	1	1	1	1	1
11	D.363	Tyre lever and screw driver	1	1	1	1	1	1
12	D.364	Tyre lever and clutch key	1	1	1	1	1	1
13	DA.50/1	Extractor, clutch hub	1	1	1	1	1	1
14	D.336	Screwdriver, Phillips No. 3	1	1	1	1	1	1
15	415116	Spanner, magneto points	1	1	1	1	1	1
16	400935	Screwdriver, distributor points	—	—	1	1	1	1
17	D.49	Tyre inflator (not in kit)	1	1	—	—	—	—
18	D.220	Spanner, fork cap nuts (not in kit)	1	1	1	1	1	1
19	167	Extractor, chain rivet (not in kit)	A	A	A	A	A	A
			A	A	A	A	A	A

SPECIAL WORKSHOP TOOLS

A COMPLETE LIST OF WORKSHOP TOOLS CAN BE MADE AVAILABLE BY EITHER CONTACTING YOUR DEALER OR APPLYING DIRECT TO THE TRIUMPH SERVICE DEPARTMENT. IN MOST CASES THESE TOOLS ARE VERY COSTLY AS THEY ARE MADE ENTIRELY FOR WORKSHOP USE, AND THEREFORE, IT IS NOT RECOMMENDED THAT THE PRIVATE OWNER PURCHASES THE TOOLS IN ORDER TO AID SERVICING THE MACHINE ONCE OR TWICE ONLY. IN THESE CIRCUMSTANCES IT IS FAR MORE ECONOMICAL TO GET IN TOUCH WITH A RECOGNISED DEALER.

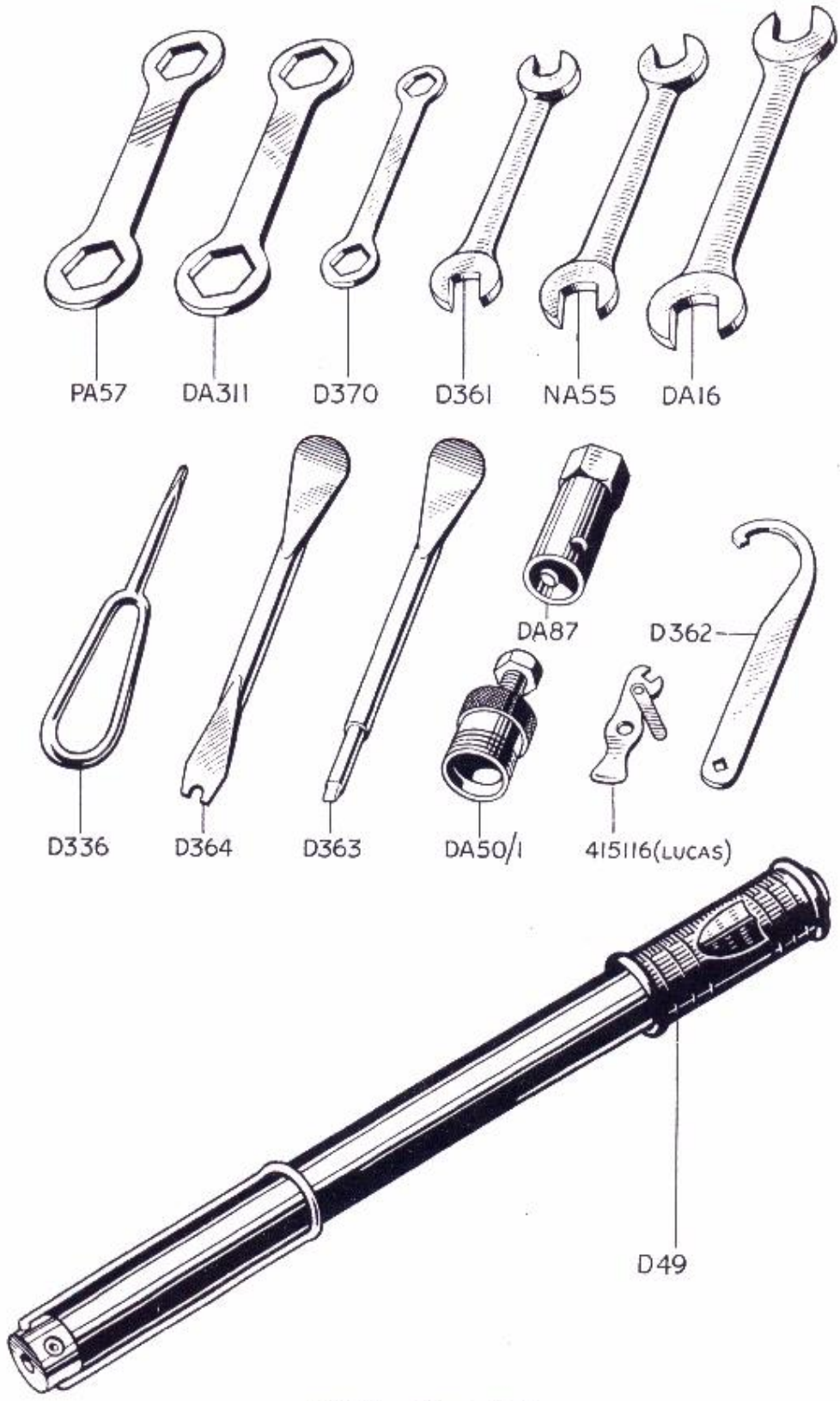

FIG. 27. TOOL KIT

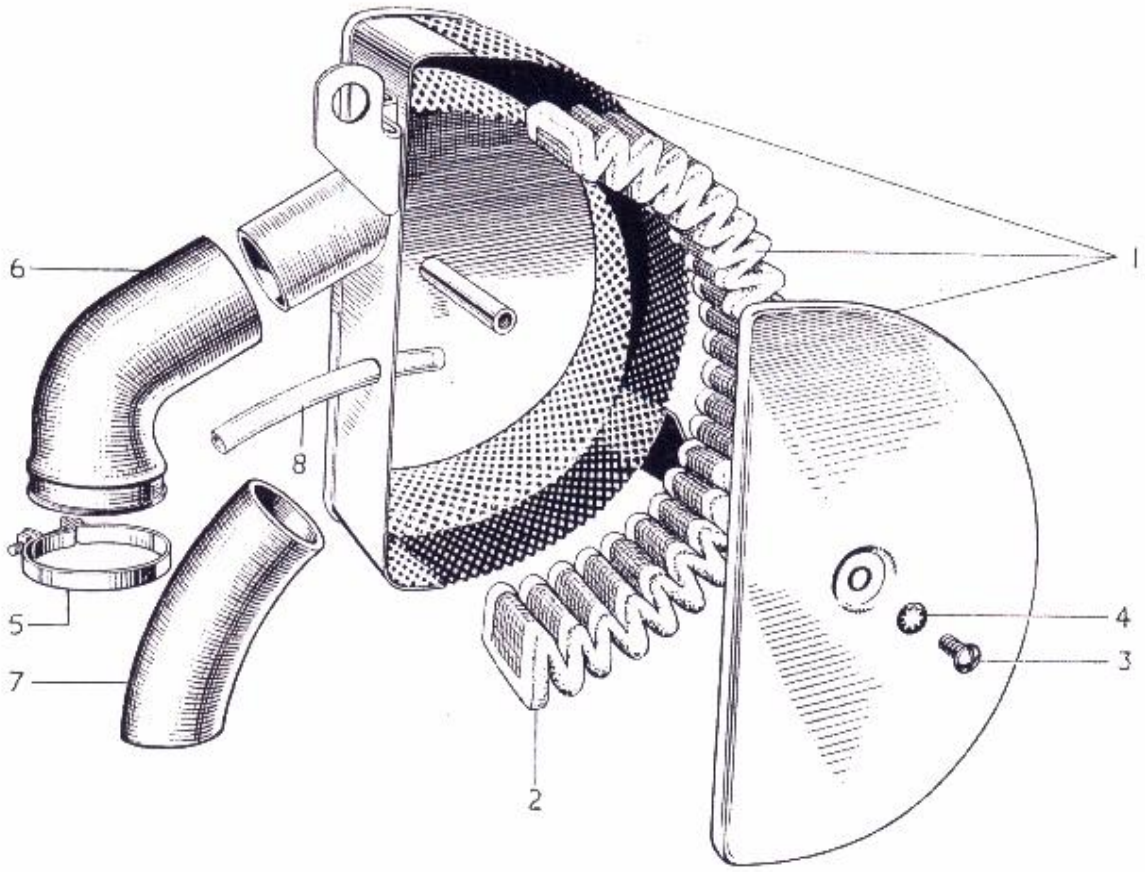

FIG. 28. AIR FILTER

INDEX FIG. 28

Illust. No.	Part No.	Page No.	Ref. No.	Illust. No.	Part No.	Page No.	Ref. No.
1	F3857	88	1	5	F3859	88	9
	F3812	88	2	6	F3858	88	8
2	F3315E	88	3	7	F3729	88	7
3	F3376	88	4	8	F3339	94	2
4	E2312	88	5				

REF. No.	PART No.	DESCRIPTION	5T	6T	TR5	T100	T110	TR6

AIR FILTER—GROUP 28

1	F3857	Air filter assembly	1	—	1	1	1	1
2	F3812	Air filter assembly	—	1	—	—	—	—
3	F3315E	Element only	1	1	1	1	1	1
4	F3376	Screw, cover $\frac{3}{8}$" U/H	1	1	1	1	1	1
5	E2312	Washer, cover screw	1	1	1	1	1	1
6	F3728	Sleeve, mild steel	—	1	—	—	—	—
7	F3729	Connection, rubber	—	1	—	—	—	—
8	F3858	Connection, rubber	1	—	1	1	1	1
9	F3859	Clip, at carburetter	1	—	1	1	1	1

LEGSHIELD—GROUP 29

10	F3208	Legshield L.H.	1	1	—	1	1	—
11	F3894	Legshield R.H.	1	1	—	1	1	—
12	F3326	Stay, legshield	2	2	—	2	2	—
13	E1598	Clip, front down tube	1	1	—	1	1	—
14	F1031	Bolt, stay to clip $\frac{15}{16}$" U/H	1	1	—	1	1	—
15	PO172A	Nut, stay to clip bolt	1	1	—	1	1	—
16	S25-2	Washer, stay to clip bolt	1	1	—	1	1	—
17	DS57	Bolt, stay to legshield $\frac{7}{16}$" U/H	4	4	—	4	4	—
18	F879	Nut, stay to legshield bolt	4	4	—	4	4	—
19	S26-2	Washer, stay to legshield bolt	4	4	—	4	4	—

SIDECAR FITTINGS—GROUP 30

20	F2587	Lug, lower front connection	1	1	1	1	1	1
21	F1746	Sleeve nut, lug to frame	2	2	2	2	2	2
22	F2600	Bolt, lower front lug	1	1	1	1	1	1
23	F1747	Nut, lower front lug bolt	1	1	1	1	1	1

N.B. Fittings for the front down tube, seat tube top lug and seat tube bottom lug are provided by the sidecar manufacturer.

PROPRIETARY GROUP

Ancillary equipment which is fitted to our motor cycles is of the highest quality and is guaranteed by the manufacturers and not by ourselves. Any repairs or claims should be made to the actual maker who will always give owners every possible assistance. The following are the addresses of the various manufacturers -

CARBURETTERS	Messrs. Amal Ltd., Holdford Road, Witton, Birmingham, 6. The S.U. Carburetter Co., Ltd., Wood Lane, Erdington, Birmingham, 24.
CHAINS	Renold Chains Ltd., Wythenshawe, Manchester.
ELECTRICAL EQUIPMENT ...	Messrs. J. Lucas, Ltd., Gt. Hampton Street, Birmingham, 18.
SPARKING PLUGS	Champion Sparking Plug Co. Ltd., Feltham, Middlesex. K.L.G. Sparking Plugs Ltd., Cricklewood Works, London, N.W.2. Lodge Plugs Ltd., Rugby, Warwickshire.
SPEEDOMETERS	Messrs. Smiths Motor Accessories Ltd., Cricklewood Works, London, N.W.2.
SUSPENSION UNITS	Messrs. Girling Ltd., Kings Road, Tyseley, Birmingham, 11
GUARANTEE CLAIMS ONLY	Triumph Engineering Co. Ltd., Meriden Works, Allesley, Coventry.
TYRES	Dunlop Rubber Co. Ltd., Fort Dunlop, Birmingham, 24.

AMAL CARBURETTER—GROUP 31

REF. No.	PART No.	DESCRIPTION	5T	6T	TR5	T100	T110	TR6
1	376/25	Carburetter complete	1	—	—	—	—	—
2	376/42	Carburetter complete (U.S. export only)	—	1	—	—	—	—
3	376/35	Carburetter complete	—	—	1	1	—	—
4	376/40	Carburetter complete	—	—	—	—	1	1
5	376/001	Chamber, mixing	1	—	1	1	—	—
6	376/003	Chamber, mixing	—	1	—	—	1	1
7	376/107	Top, mixing chamber	1	1	1	1	1	1
8	376/065	Cap, mixing chamber	1	1	1	1	1	1
9	4/276	Spring, mixing chamber cap	1	1	1	1	1	1
10	4/241	Screw, cap spring	1	1	1	1	1	1
11	376/062	Valve, air	1	1	1	1	1	1
12	4/046	Spring, air valve	1	1	1	1	1	1
13	6/047	Guide, air valve	1	1	1	1	1	1
14	376/060	Valve, throttle (3¼ cutaway)	1	1	1	1	1	1
15	376/061	Spring, throttle valve	1	1	1	1	1	1
16	376/068	Screw, throttle stop	1	1	1	1	1	1
17	376/069	Spring, throttle stop screw	1	1	1	1	1	1
18	332/017	Screw, air adjusting	1	1	1	1	1	1
19	4/148	Spring, air adjusting screw	1	1	1	1	1	1
20	376/100	Jet, main (200)	1	—	—	—	—	—
21	376/100	Jet, main (270)	—	1	—	—	—	—
22	376/100	Jet, main (220)	—	—	1	1	—	—
23	376/100	Jet, main (250)	—	—	—	—	1	1
24	376/055	Block, jet	1	—	1	1	—	—
25	376/057	Block, jet	—	1	—	—	1	1
26	376/070	Peg, jet block locating	1	1	1	1	1	1
27	376/067	Washer, jet block	1	1	1	1	1	1
28	376/073	Holder, main jet	1	1	1	1	1	1
29	376/074	Washer, main jet holder	1	1	1	1	1	1
30	376/075	Nut, main jet cover	1	1	1	1	1	1
31	376/072	Jet, needle (.1065)	1	1	1	1	1	1
32	376/063	Needle, jet (Type C)	1	1	1	1	1	1
33	4/230	Clip, jet needle	1	1	1	1	1	1
34	376/076	Jet, pilot (30)	1	—	—	—	—	—
35	376/076	Jet, pilot (25)	—	1	1	1	1	1
36	116/162	Washer, pilot jet cover nut	1	1	1	1	1	1
37	376/095	Nut, pilot jet cover	1	1	1	1	1	1
38	4/035	Adjuster, cable	1	1	1	1	1	1
39	6/132A	Ferrule, cable	1	1	1	1	1	1
40	376/077	Cover, float chamber	1	1	1	1	1	1
41	376/078	Washer, float chamber cover joint	1	1	1	1	1	1
42	376/079	Screw, float chamber cover	3	3	3	3	3	3
43	376/083	Float	1	1	1	1	1	1
44	376/085	Spindle, float hinge	1	1	1	1	1	1
45	376/094	Bush, float spindle	1	1	1	1	1	1
46	376/089	Needle, valve	1	1	1	1	1	1
47	376/088	Seating, valve needle	1	1	1	1	1	1

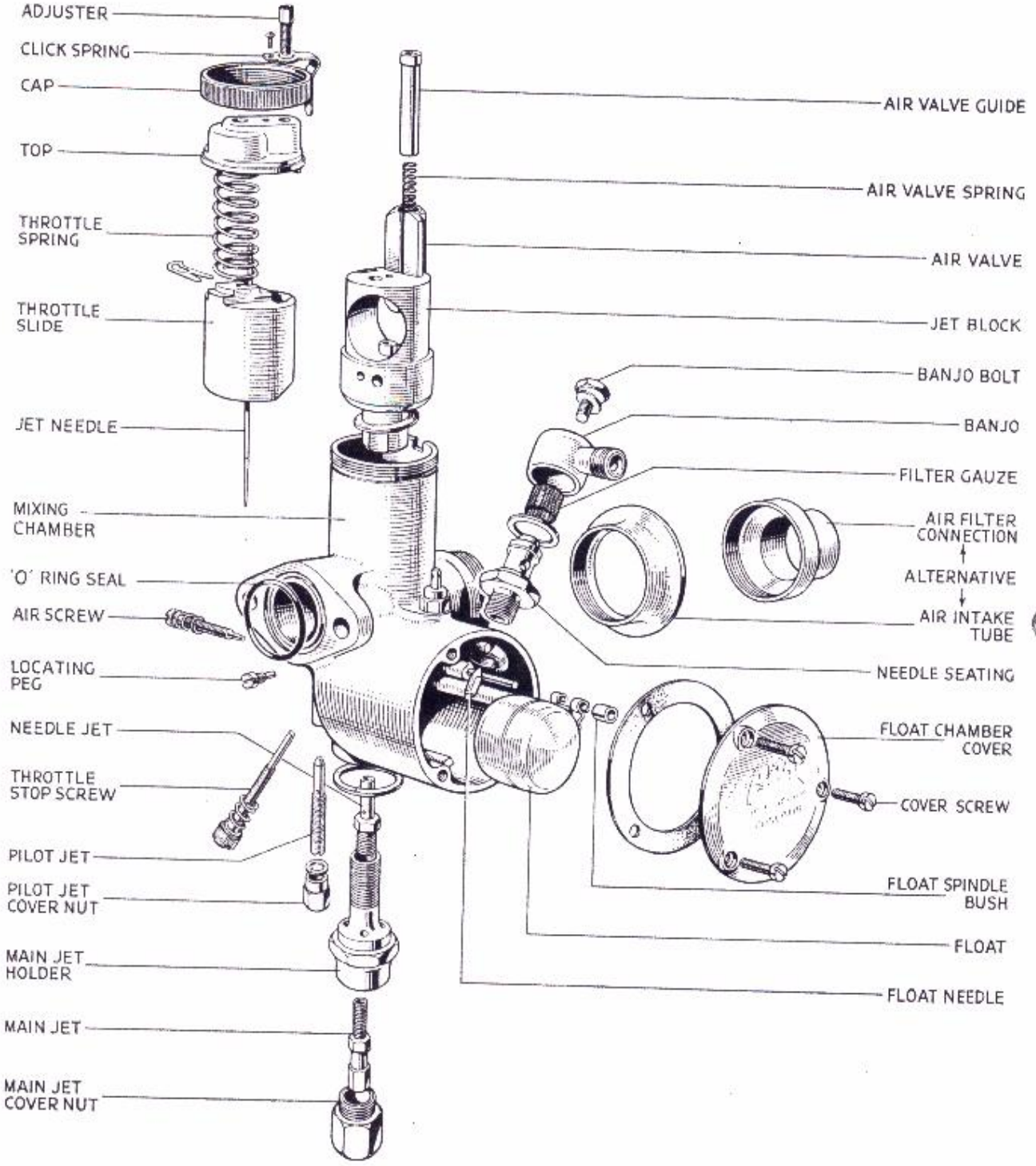

FIG. 29. AMAL CARBURETTER

REF. No.	PART No.	DESCRIPTION	5T	6T	TR5	T100	T110	TR6
1	376/086	Tickler	1	1	1	1	1	1
2	343/011	Body, tickler	1	1	1	1	1	1
3	376/087	Spring, tickler	1	1	1	1	1	1
4	376/090	Connection, banjo	1	—	—	—	—	—
5	376/108	Connection, banjo	—	1	1	1	1	1
6	14/175	Washer, banjo	1	1	1	1	1	1
7	376/093	Gauze, filter	1	1	1	1	1	1
8	376/091	Bolt, banjo	1	1	1	1	1	1
9	376/092	Washer, banjo bolt	1	1	1	1	1	1
10	NA43A	Washer, insulating block to manifold	—	—	1	1	1	1
11	E2968	Block, insulating	—	—	1	1	1	1
12	244/765	"O" ring seal, carburetter to manifold	1	1	1	1	1	1
13	376/066	Tube, air intake (for use when air filter is disconnected)	A	A	A	A	A	A

N.B. When air filter is disconnected, fit a main jet size 20 larger :— e.g., T110 main jet was 250, fit 270.

For sustained high speed, check sparking plug condition (first make sure plug grade is correct) as detailed in Amal leaflet No. 502, and increase jet size further if necessary.

REF. No.	PART No.	DESCRIPTION	5T	6T	TR5	T100	T110	TR6

S.U. CARBURETTER—GROUP 32

1	AUC603	Carburetter MC2	—	1	—	—	—	—		
		Less Triumph fittings								

FITTINGS (TRIUMPH)

2	F3339	Vent pipe, carburetter to air filter	—	1	—	—	—	—		
3	E3075	Washer, carburetter flange	—	1	—	—	—	—		

INDEX FIG. 30

Illust. No.	*Part No.*	*Page No.*	*Ref. No.*	*Illust. No.*	*Part No.*	*Page No.*	*Ref. No.*
1	AUC7023	95	1	33	108	96	25
2	AUC4923	95	2	34	381	96	26
3	4805	95	3	35	4884/1	96	27
4	4804	95	4	36	4885	96	28
5	AUC1011	95	5	37	4875/2	96	29
6	5073	95	6	38	5023	96	30
7	4857	95	7	39	156	96	31
8	1863	95	8	40	109	96	32
9	AUC8006	96	1	41	4872/1	96	33
10	4387	96	2	42	1216	96	34
11	3071	96	3	43	4517	96	35
12	149	96	4	44	1223	96	36
13	M9	96	5	45	1121/1859	96	37
14	4857	96	6	46	1981	96	38
15	1863	96	7	47	1251	96	39
16	4900	96	8	48	130	97	1
17	4920	96	9	49	5026/7	97	2
18	112/4931	96	10	50	1412	97	3
19	3232	96	11	51	1541/3	97	4
20	3230	96	12	52	1163	97	5
21	3231	96	13	53	1606	97	6
22	122	96	14	54	4901/4807	97	7
23	3233	96	15	56	169	97	8
24	117	96	16	57	1358	97	9
25	118	96	17	59	1500/6	97	11
26	119/1	96	18	60	694	97	12
27	120	96	19	61	156	97	13
28	1158	96	20	62	246	97	14
29	121	96	21	63	3464	97	15
30	114	96	22	64	3465	97	16
31	4882	96	23	65	5070	97	17
32	4883	96	24				

REF

1
2
3
4
5
6
7
8

TR6

FIG. 30
S.U. CARBURETTER
TYPE MC2

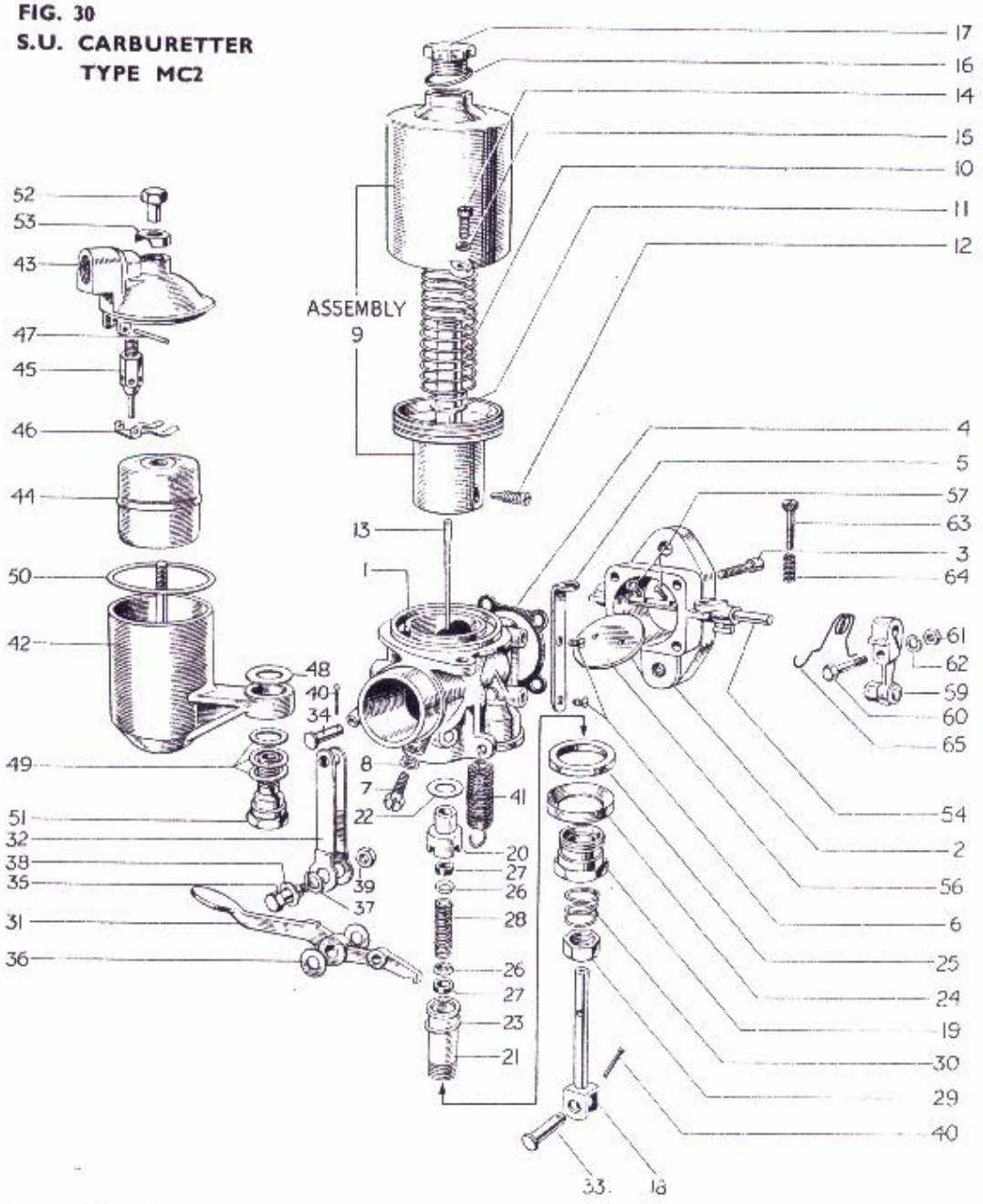

REF. No.	PART No.	DESCRIPTION	5T	6T	TR5	T100	T110	TR6
		CARBURETTER BODY						
1	AUC7023	Body, carburetter c/w guide pin and plug	—	1	—	—	—	—
2	AUC4923	Adaptor, throttle barrel	—	1	—	—	—	—
3	4805	Screw, adaptor to body	—	4	—	—	—	—
4	4804	Joint, adaptor to body	—	1	—	—	—	—
5	AUC1011	Abutment bracket, throttle cable	—	1	—	—	—	—
6	5073	Screw, bracket to carburetter	—	2	—	—	—	—
7	4857	Screw, 2BA Plug	—	1	—	—	—	—
8	1863	Washer, 2BA Plug screw	—	1	—	—	—	—

GROUP 32 — S.U. CARBURETTER

REF. No.	PART No.	DESCRIPTION	5T	6T	TR5	T100	T110	TR6
		SUCTION CHAMBER						
1	AUC8006	Chamber, suction complete	—	1	—	—	—	—
2	4387	Spring, piston	—	1	—	—	—	—
3	3071	Washer, thrust	—	1	—	—	—	—
4	149	Screw, needle	—	1	—	—	—	—
5	M9	Needle, jet	—	1	—	—	—	—
6	4857	Screw, chamber securing	—	2	—	—	—	—
7	1863	Washer, spring	—	2	—	—	—	—
8	4900	Washer, oil cap	—	1	—	—	—	—
9	4920	Oil cap, octagonal	—	1	—	—	—	—
		JET ASSEMBLY						
10	112/4931	Jet	—	1	—	—	—	—
11	3232	Screw, jet	—	1	—	—	—	—
12	3230	Bearing, jet top half	—	1	—	—	—	—
13	3231	Bearing, jet bottom half	—	1	—	—	—	—
14	122	Washer, top half (copper)	—	1	—	—	—	—
15	3233	Washer, bottom half (copper)	—	1	—	—	—	—
16	117	Ring, sealing (brass)	—	1	—	—	—	—
17	118	Ring, sealing (cork)	—	1	—	—	—	—
18	119/1	Washer, gland (brass)	—	2	—	—	—	—
19	120	Washer, gland (cork)	—	2	—	—	—	—
20	1158	Spring gland	—	1	—	—	—	—
21	121	Nut, adjusting	—	1	—	—	—	—
22	114	Spring	—	1	—	—	—	—
		JET LEVER AND LINKAGE						
23	4882	Lever, jet	—	1	—	—	—	—
24	4883	Link, jet	—	1	—	—	—	—
25	108	Pivot pin, long	—	1	—	—	—	—
26	381	Pivot, pin short	—	1	—	—	—	—
27	4884/1	Bolt	—	1	—	—	—	—
28	4885	Washer, fibre	—	2	—	—	—	—
29	4875/2	Washer, double coil spring	—	1	—	—	—	—
30	5023	Washer, plain	—	1	—	—	—	—
31	156	Nut, 2BA	—	1	—	—	—	—
32	109	Split pin	—	2	—	—	—	—
33	4872/1	Spring, return	—	1	—	—	—	—
		FLOAT CHAMBER						
34	1216	Chamber, float	—	1	—	—	—	—
35	4517	Lid, float chamber	—	1	—	—	—	—
36	1223	Float	—	1	—	—	—	—
37	1121/1859	Needle and seat	—	1	—	—	—	—
38	1981	Lever, hinged	—	1	—	—	—	—
39	1251	Pin, hinged lever	—	1	—	—	—	—

R6

REF. No.	PART No.	DESCRIPTION	5T	6T	TR5	T100	T110	TR6
1	130	Washer, fibre	—	1	—	—	—	—
2	5026/7	Washer, set—2 fibre, 1 brass	—	1	—	—	—	—
3	1412	Washer, float chamber lid	—	1	—	—	—	—
4	1541/3	Bolt, holding	—	1	—	—	—	—
5	1163	Nut, float lid	—	1	—	—	—	—
6	1606	Cap, brass	—	1	—	—	—	—
		THROTTLE						
7	4901/4807	Spindle, throttle	—	1	—	—	—	—
8	169	Disc, throttle	—	1	—	—	—	—
9	1358	Screw, throttle disc	—	2	—	—	—	—
10	106	Pin, taper	—	1	—	—	—	—
11	1500/6	Lever, throttle	—	1	—	—	—	—
12	694	Bolt	—	1	—	—	—	—
13	156	Nut	—	1	—	—	—	—
14	246	Washer, spring	—	1	—	—	—	—
15	3464	Screw, adjusting	—	1	—	—	—	—
16	3465	Spring, adjusting screw lock	—	1	—	—	—	—
17	5070	Spring, return	—	1	—	—	—	—

CHAIN—GROUP 33

18	D301	Chain, primary 70L × ½" × .305"	1	1	1	1	1	1
19	D304	Chain, rear 100L × ⅜" × ⅜"	1	—	1	1	—	—
20	D310	Chain, rear 101L × ⅜" × ⅜"	—	1	—	—	1	1
21	110-046/49	Kit, primary chain spare parts	1	1	1	1	1	1
22	110-056/59	Kit, rear chain spare parts	1	1	1	1	1	1

LUCAS LIGHTING AND IGNITION EQUIPMENT—GROUP 34

(For Models fitted with Dynamo and Magneto)

DYNAMO (TYPE E3L-LIO)

REF. No.	PART No.	DESCRIPTION	5T	6T	TR5	T100	T110	TR6
1	20035A	Dynamo complete (positive earth)	—	—	1	1	1	1
2	200712	Armature	—	—	1	1	1	1
3	200911	Insulating plate with brush boxes	—	—	1	1	1	1
4	200910	Bracket, commutator end	—	—	1	1	1	1
5	189210	Bearing, commutator end	—	—	1	1	1	1
6	200918	Cover, commutator end	—	—	1	1	1	1
7	200904	Ring, sealing commutator end	—	—	1	1	1	1
8	200748	Plate, drive and oil seal end	—	—	1	1	1	1
9	200760	Bracket, drive and oil seal end	—	—	1	1	1	1
10	189307	Bearing, drive and oil seal end	—	—	1	1	1	1
11	200731	Coil, field	—	—	1	1	1	1
12	188818	Nipple, cable fixing	—	—	2	2	2	2
13	200908	Plate, cable clamp	—	—	1	1	1	1
14	109660	Screw, cable clamp plate	—	—	1	1	1	1
15	200732	Bolt, through fixing	—	—	2	2	2	2
16	166014	Nut, through fixing bolt	—	—	2	2	2	2
17	188330	Washer, through fixing bolt	—	—	2	2	2	2
18	200737	Brush set	—	—	1	1	1	1
19	220197	Spring set, brush	—	—	1	1	1	1
20	189386	Key, woodruff	—	—	1	1	1	1
21	E2451	Pinion, dynamo	—	—	1	1	1	1
22	111704	Screw, dynamo pinion	—	—	1	1	1	1
23	188378	Washer, dynamo pinion	—	—	1	1	1	1
24	E2228	Nut (dome), dynamo to gear case	—	—	1	1	1	1
25	E2414	Stud, dynamo fixing $1\frac{3}{4}$" O/A	—	—	1	1	1	1
26	E2226	Washer, dynamo to crankcase joint	—	—	1	1	1	1
27	E2230	Strap, dynamo fixing	—	—	1	1	1	1
28	460025	Swivel, dynamo strap	—	—	2	2	2	2
29	112450	Screw, dynamo strap	—	—	2	2	2	2
30	E2784	Cover plate, crankcase (when dynamo is removed)	—	—	1	1	1	1
31	200895	Grommet, harness lead	—	—	1	1	1	1

CUT-OUT AND REGULATOR UNIT (TYPE RB107)

32	37127H	Regulator, complete	—	—	1	1	1	1
33	F1369	Bolt, unit to rear stays $\frac{5}{8}$" U/H	—	—	2	2	2	2
34	F879	Nut, for F1369	—	—	2	2	2	2
35	E1612	Washer, for F879	—	—	2	2	2	2

LUCAS LIGHTING AND IGNITION EQUIPMENT – GROUP 34
(DYNAMO AND MAGNETO)

REF. No.	PART No.	DESCRIPTION	5T	6T	TR5	T100	T110	TR6
		HEADLAMP (NACELLE TYPE MCF700P)						
1	51860A	Headlamp assembly	—	—	—	1	1	—
2	553248	Rim, front	—	—	—	1	1	—
3	534296	Screw and plate, front rim fixing	—	—	—	1	1	—
4	555309	Glass and reflector unit	—	—	—	1	1	—
5	553267	Ring, lamp fixing...	—	—	—	1	1	—
6	554602	Adaptor, bulb	—	—	—	1	1	—
7	504665	Fixing wire, light unit	—	—	—	6	6	—
8	373	Bulb, pre-focused 30/24W.	—	—	—	1	1	—
9	554710	Pilot bulbholder	—	—	—	1	1	—
10	988	Bulb, pilot 3W	—	—	—	1	1	—
11	H689	Screw, lamp fixing ring $\frac{1}{4}$" U/H	—	—	—	2	2	—
12	H690	Nut, lamp fixing ring screw	—	—	—	2	2	—
		HEADLAMP (TROPHY)						
13	51892A	Headlamp assembly	—	—	1	—	—	1
14	553248	Rim, front	—	—	1	—	—	1
15	534296	Screw and plate, front rim fixing	—	—	1	—	—	1
16	516798	Glass and reflector unit	—	—	1	—	—	1
17	554602	Adaptor, bulb	—	—	1	—	—	1
18	504665	Fixing wire, light unit	—	—	6	—	—	6
19	312	Bulb, pre-focused 30/24W	—	—	1	—	—	1
20	554710	Pilot bulbholder	—	—	1	—	—	1
21	988	Bulb, pilot 3W	—	—	1	—	—	1
22	859260/809795	Plug and Socket	—	—	1	—	—	1
23	36084	Ammeter	—	—	1	—	—	1
24	31315	Switch, light	—	—	1	—	—	1
25	308312	Panel, instrument	—	—	1	—	—	1
26	516183	Beading, instrument panel	—	—	1	—	—	1
27	186130	Screw, instrument panel	—	—	4	—	—	4
28	188818	Nipple, cable fixing	—	—	1	—	—	1
		HORN (TYPE HF1441)						
29	70048A	Horn, complete	—	—	1	1	1	1
30	701851	Bracket, horn	—	—	2	2	2	2
31	F3689	Bracket, horn (saddle stud fitting)	—	—	1	—	—	1
32	700920	Bracket, horn angle	—	—	—	1	1	—
33	142689	Screw, horn bracket	—	—	—	2	2	—
34	185051	Washer, horn bracket	—	—	—	2	2	—
35	DS57	Bolt, horn bracket to lug $\frac{7}{16}$" U/H	—	—	—	2	2	—
36	S26-2	Washer, horn bracket to lug	—	—	—	2	2	—
37	H687	Screw, mounting bracket $\frac{3}{8}$" U/H	—	—	2	—	—	2
38	GS299	Washer, bracket screw	—	—	2	—	—	2
39	H745	Nut, bracket screw	—	—	2	—	—	2

GROUP 34 – LUCAS LIGHTING AND IGNITION EQUIPMENT
(DYNAMO AND MAGNETO)

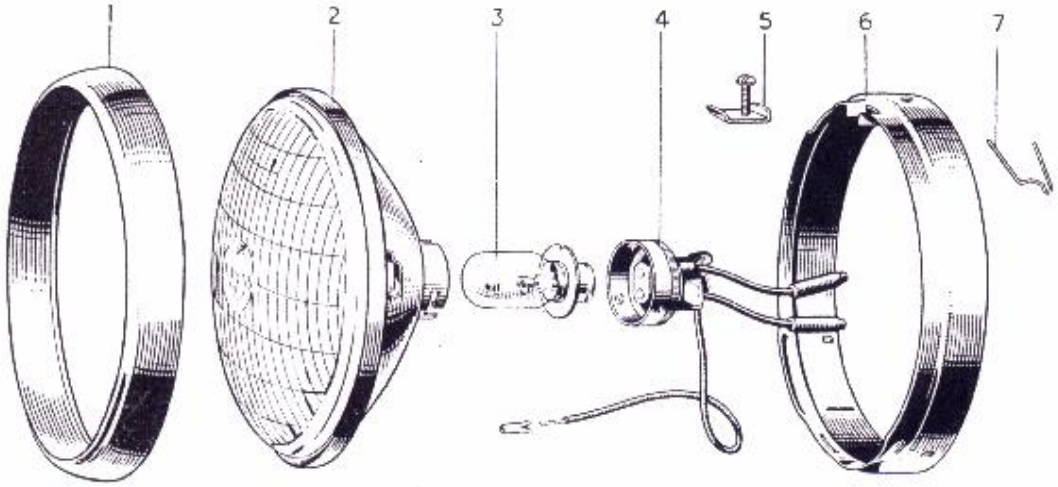

FIG. 31. HEAD LAMP

INDEX FOR DYNAMO CONDITION

INDEX FOR "D.C." CONDITION (T100, T110, TR5 & TR6)

Illust. No.	*Part No.*	*Page No.*	*Ref. No.*	*Illust. No.*	*Part No.*	*Page No.*	*Ref. No.*
1	553248	99	2	4	554602	99	6
2	555309	99	4	5	534296	99	3
	516798	99	16	6	553267	99	5
3	373	99	8	7	504665	99	7
	312	99	19				

INDEX FOR "AC" CONDITION (5T & 6T)

Illust. No.	*Part No.*	*Page No.*	*Ref. No.*	*Illust. No.*	*Part No.*	*Page No.*	*Ref. No.*
1	553248	105	15	5	534296	105	16
2	555309	105	17	6	553267	105	18
3	373	105	21	7	504665	105	20
4	554602	105	19				

LUCAS LIGHTING AND IGNITION EQUIPMENT – GROUP 34
(DYNAMO AND MAGNETO)

REF. No.	PART No.	DESCRIPTION	5T	6T	TR5	T100	T110	TR6
		TAIL LAMP (STOP LIGHT PATTERN WITH INTEGRAL REFLECTORS) TYPE 564						
1	53432A	Stop and tail lamp	—	—	1	1	1	1
2	573839	Lens	—	—	1	1	1	1
3	575200	Window	—	—	1	1	1	1
4	575208	Gasket, lens seating	—	—	1	1	1	1
5	552928	Screw, lens retaining	—	—	2	2	2	2
6	575212	Base assembly	—	—	1	1	1	1
7	575209	Bulbholder assembly	—	—	1	1	1	1
8	575207	Grommet, bulbholder	—	—	1	1	1	1
9	573828	Contact assembly	—	—	1	1	1	1
10	573825	Grommet, cable	—	—	1	1	1	1
11	384	Bulb 6/18w offset pin	—	—	1	1	1	1
12	31383	Switch, stop lamp	—	—	1	1	1	1
13	H687	Screw, switch fixing ¼" U/H	—	—	2	2	2	2
14	GS299	Washer, fixing screw	—	—	2	2	2	2
		WIRING HARNESS						
15	836381	Wiring harness	—	—	—	1	1	—
16	831200	Wiring harness	—	—	1	—	—	1
17	838604	Lead, twin stop/tail lamp	—	—	1	1	1	1
		NACELLE INSTRUMENT PANEL						
18	31371B	Switch, lighting	—	—	—	1	1	—
19	351567	Lever and screw, switch	—	—	—	1	1	—
20	36129A	Ammeter	—	—	—	1	1	—
21	31071B	Button, cut-out	—	—	—	1	1	—
		HANDLEBAR SWITCHES AND PUSHBUTTONS						
22	31563A	Switch, dipper and horn push	—	—	1	1	1	1
23	863082	Cable (4 core), dipper and horn push	—	—	1	1	1	1
24	H689	Screw, switch to lever clamp ¼" U/H	—	—	2	2	2	2
25	76200A	Button, cut out	—	—	1	—	—	1
		BATTERY (TYPE PU7E-9)						
26	PU7E-9	Battery	—	—	1	1	1	1
27	4179504	Plug, vent	—	—	3	3	3	3
28	4189048	Connection, battery lead "+"	—	—	1	1	1	1
29	4189040	Connection, battery lead "—"	—	—	1	1	1	1
30	4188743	Socket, connection "+"	—	—	1	1	1	1
31	4188744	Socket, connection "—"	—	—	1	1	1	1

GROUP 34 – LUCAS LIGHTING AND IGNITION EQUIPMENT
(DYNAMO AND MAGNETO)

REF. No.	PART No.	DESCRIPTION	5T	6T	TR5	T100	T110	TR6
		MAGNETO (with screwed-on pick-ups and end cap)						
1	42298	Magneto, manual advance and retard	—	—	1	1	1	1
2	458876 LH	Pick-up with brush and spring L.H.	—	—	1	1	1	1
3	458876 RH	Pick-up with brush and spring R.H.	—	—	1	1	1	1
4	458877	Washer, pick-up seating	—	—	2	2	2	2
5	451260	Brush and spring	—	—	2	2	2	2
6	410600	Nut, moulded	—	—	2	2	2	2
7	145074	Screw, pick-up fixing	—	—	4	4	4	4
8	458658	Grommet, rubber	—	—	2	2	2	2
9	459269	Cover assembly, contact breaker	—	—	1	1	1	1
10	459288	Terminal assembly, C.B. cover	—	—	1	1	1	1
11	459266	Cap, moulded, breather	—	—	1	1	1	1
12	455190	Brush and spring	—	—	1	1	1	1
13	457681	Gasket, rubber	—	—	1	1	1	1
14	122160	Screw, contact breaker fixing	—	—	1	1	1	1
15	470534	Contact breaker	—	—	1	1	1	1
16	470609	Contact set	—	—	1	1	1	1
17	470688	Set, contact actuating springs	—	—	1	1	1	1
18	470537	Brush and spring, C.B. earthing	—	—	1	1	1	1
19	458728	Control parts set (manual)	—	—	1	1	1	1
20	458731	Cap, rubber	—	—	1	1	1	1
21	458725	Cam	—	—	1	1	1	1
22	459271	End plate with bearing ring	—	—	1	1	1	1
23	463932	Cup, bearing insulating	—	—	1	1	1	1
24	150509	Screw, end plate fixing	—	—	3	3	3	3
25	185048	Washer, spring, fixing screw	—	—	3	3	3	3
26	452906	Washer, .003" shim, end plate packing ...	As required					
	452907	Washer, .005" shim, end plate packing ...						
27	459004	Armature	—	—	1	1	1	1
28	455361	Slip ring	—	—	1	1	1	1
29	458339	Condenser	—	—	1	1	1	1
30	189294	Bearing, C.B. end	—	—	1	1	1	1
31	189244	Bearing, drive end	—	—	1	1	1	1
32	459005	Cup, bearing insulating	—	—	1	1	1	1
33	459002	Oil seal, rubber	—	—	1	1	1	1
34	455191	Brush, spring and holder, earth	—	—	1	1	1	1
35	455190	Brush and spring, earth	—	—	1	1	1	1
		MAGNETO SUNDRY PARTS SET						
36	458675	Nut, screws and washers	—	—	1	1	1	1
		MAGNETO, RACING						
37	42324A	Magneto, manual advance and retard ...	—	—	A	—	—	A

Parts for this magneto are not supplied separately, for repair return to : LUCAS RACING SECTION, GT. HAMPTON STREET, BIRMINGHAM, 18.

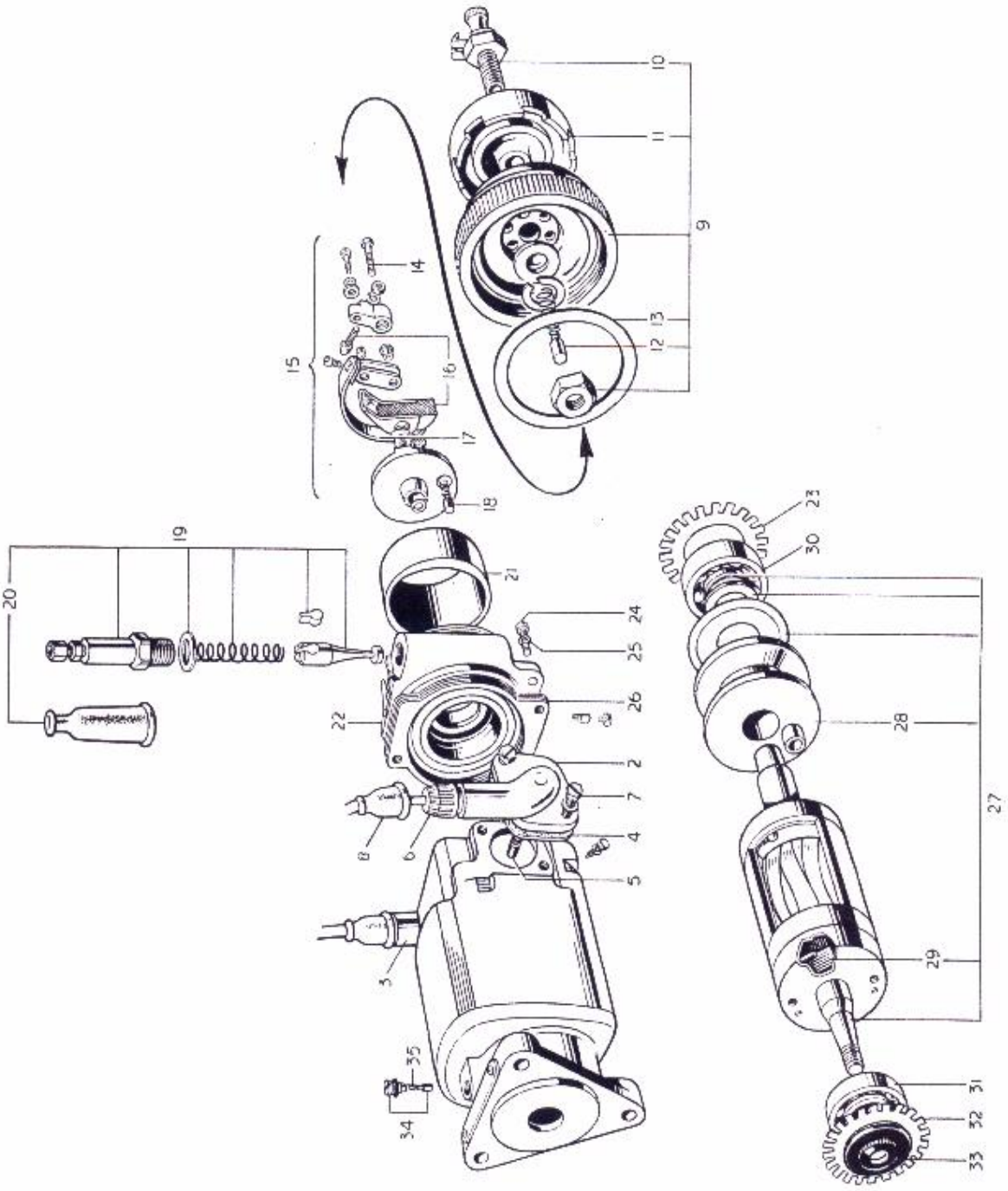

FIG. 32. LUCAS MAGNETO

LUCAS LIGHTING AND IGNITION EQUIPMENT—GROUP 34

REF. No.	PART No.	DESCRIPTION	5T	6T	TR5	T100	T110	TR6
		ALTERNATOR (RM14, THIN)						
1	047510	Alternator assembly, complete	1	1	—	—	—	—
2	465969	Rotor	1	1	—	—	—	—
3	465974	Stator assembly	1	1	—	—	—	—
4	862898	Cable, alternator output	1	1	—	—	—	—
5	E3447	Stud, alternator stator to chaincase, inner half $2\frac{7}{16}$" O/A	3	3	—	—	—	—
6	E3448	Distance collar, stator stud	3	3	—	—	—	—
7	T1238	Grommet, alternator leads	1	1	—	—	—	—
8	F3098	Clip, alternator leads	1	1	—	—	—	—
9	E1612	Washer, GS662, nut	3	3	—	—	—	—
10	GS662	Nut, Stator securing	3	3	—	—	—	—
11	465672	Washer, alternator locking	1	1	—	—	—	—
		RECTIFIER (TYPE FSW.1500A)						
12	47111A	Rectifier	1	1	—	—	—	—
13	F3620	Bracket, rectifier fixing	1	1	—	—	—	—
14	DS57	Bolt, rectifier, front and rear $\frac{7}{16}$" U/H	3	3	—	—	—	—
15	F879	Nut, rectifier rear bolt	2	2	—	—	—	—
16	E1612	Washer, rectifier bolt	3	3	—	—	—	—
17	F3600	Nut, rectifier to bracket	1	1	—	—	—	—
		IGNITION COIL (TYPE MA6)						
18	45077A	Ignition coil	1	1	—	—	—	—
19	421863	Clip, H.T. terminal	1	1	—	—	—	—
20	E3111	Bracket, coil mounting	1	1	—	—	—	—
21	DS57	Bolt, coil to bracket $\frac{7}{16}$" U/H	2	2	—	—	—	—
22	F879	Nut, coil to bracket bolt	2	2	—	—	—	—
23	E2312	Washer, coil to bracket bolt	2	2	—	—	—	—
24	422567	Rubber cover, H.T. lead	1	1	—	—	—	—
25	236741	Rubber cover, L.T. lead	2	2	—	—	—	—
		DISTRIBUTOR						
26	40352D	Distributor model DKX2A (15° range)	1	—	—	—	—	—
27	40449A	Distributor model DKX2A ($12\frac{1}{2}$° range)	—	1	—	—	—	—
28	406105	Plate assembly	1	1	—	—	—	—
29	400136	Cap, distributor	1	1	—	—	—	—
30	404435	Brush and spring	1	1	—	—	—	—
31	400052	Rotor arm	1	1	—	—	—	—
32	400308	Condenser	1	1	—	—	—	—
33	400415	Contact set	1	1	—	—	—	—
34	415283	Cam	1	1	—	—	—	—
35	416031/S	Springs auto advance set	1	1	—	—	—	—
36	415730	Weight assembly	1	1	—	—	—	—

LUCAS LIGHTING AND IGNITION EQUIPMENT (ALTERNATOR) – GROUP 34

REF. No.	PART No.	DESCRIPTION	5T	6T	TR5	T100	T110	TR6
1	400001	Base only, distributor	1	1	—	—	—	—
2	400164	Base c/w contact points	1	1	—	—	—	—
3	421414	Shaft and action plate	1	—	—	—	—	—
4	421935	Shaft and action plate	—	1	—	—	—	—
5	420406	Bushing	1	1	—	—	—	—
6	400843	Sundry parts set	1	1	—	—	—	—
7	407131	Toggle	1	1	—	—	—	—
8	410591	Clip, cover retaining	1	1	—	—	—	—
9	E3122	Adaptor, distributor to crankcase	1	1	—	—	—	—
10	SI-5I	Nut, distributor to crankcase	3	3	—	—	—	—
11	PCE102F	Bolt, distributor clamp	1	1	—	—	—	—
12	E2312	Washer, distributor clamp	1	1	—	—	—	—
13	E3303	Cover, distributor protective	1	1	—	—	—	—

HEADLAMP (NACELLE TYPE MCF700P)

14	51860A	Headlamp assembly	1	1	—	—	—	—
15	553248	Rim, front	1	1	—	—	—	—
16	534296	Screw and plate, front rim fixing	1	1	—	—	—	—
17	555309	Glass and reflector unit	1	1	—	—	—	—
18	553267	Ring, lamp fixing	1	1	—	—	—	—
19	554602	Adaptor, bulb	1	1	—	—	—	—
20	504665	Fixing wire, light unit	6	6	—	—	—	—
21	373	Bulb, pre-focused 30/24W.	1	1	—	—	—	—
22	554710	Pilot bulbholder	1	1	—	—	—	—
23	988	Bulb, pilot 3W.	1	1	—	—	—	—
24	H689	Screw, lamp fixing ring ¼" U/H	2	2	—	—	—	—
25	H690	Nut, lamp fixing ring screw	2	2	—	—	—	—

TAIL LAMP (STOP LIGHT PATTERN WITH INTEGRAL REFLECTORS) TYPE 564

26	53432A	Stop and tail lamp	1	1	—	—	—	—
27	573839	Lens	1	1	—	—	—	—
28	575200	Window	1	1	—	—	—	—
29	575208	Gasket, lens seating	1	1	—	—	—	—
30	552928	Screw, lens retaining	2	2	—	—	—	—
31	575212	Base assembly	1	1	—	—	—	—
32	575209	Bulbholder assembly	1	1	—	—	—	—
33	575207	Grommet, bulbholder	1	1	—	—	—	—
34	573828	Contact assembly	1	1	—	—	—	—
35	573825	Grommet, cable	1	1	—	—	—	—
36	384	Bulb 3/18W. offset pin	1	1	—	—	—	—
37	31383	Switch, stop lamp	1	1	—	—	—	—
38	H687	Screw, switch fixing ⅜" U/H	2	2	—	—	—	—
39	GS299	Washer, fixing screw	2	2	—	—	—	—

GROUP 34 – LUCAS LIGHTING AND IGNITION EQUIPMENT (ALTERNATOR)

REF. No.	PART No.	DESCRIPTION	5T	6T	TR5	T100	T110	TR6
		WIRING HARNESS						
1	838601	Harness, wiring	1	1	—	—	—	—
2	838604	Lead, twin stop/tail lamp	1	1	—	—	—	—
3	414965	Grommet, Distributor lead	1	1	—	—	—	—
4	236741	Grommet, L.T. Coil lead	2	2	—	—	—	—
5	458658	Grommet, Distributor plug leads	2	2	—	—	—	—
		NACELLE INSTRUMENT PANEL						
6	31443B	Switch, lighting and ignition	1	1	—	—	—	—
7	318346	Knob, light switch	1	1	—	—	—	—
8	319333	Screw, knob fixing	1	1	—	—	—	—
9	318343	Plate, switch position index	1	1	—	—	—	—
10	318323	Grommet, switch for key	1	1	—	—	—	—
11	318341	Key, ignition	1	1	—	—	—	—
12	36189A	Ammeter	1	1	—	—	—	—
		HORN PUSH AND DIPPER SWITCH						
13	31563A	Switch, dipper and horn push	1	1	—	—	—	—
14	H689	Screw, switch to lever clamp $\frac{1}{4}$" U/H ...	2	2	—	—	—	—
15	863082	Cable (4 core), dipper and horn push ...	1	1	—	—	—	—
		HORN						
16	70048A	Horn, complete	1	1	—	—	—	—
17	701851	Bracket, horn	2	2	—	—	—	—
18	700920	Bracket, horn angle	1	1	—	—	—	—
19	142689	Screw, horn bracket	2	2	—	—	—	—
20	185051	Washer, horn bracket	2	2	—	—	—	—
21	DS57	Bolt, horn bracket to lug $\frac{3}{16}$" U/H ...	2	2	—	—	—	—
22	S26-2	Washer, horn bracket to lug	2	2	—	—	—	—
		BATTERY (TYPE PU7E-9)						
23	PU7E-9	Battery	1	1	—	—	—	—
24	4179504	Plug, vent	3	3	—	—	—	—
25	4189048	Connection, battery lead "+"	1	1	—	—	—	—
26	4189040	Connection, battery lead "—"	1	1	—	—	—	—
27	4188743	Socket, connection "+"	1	1	—	—	—	—
28	4188744	Socket, connection "—"	1	1	—	—	—	—

TR6

REF. No.	PART No.	DESCRIPTION	5T	6T	TR5	T100	T110	TR6
TWINSEAT—GROUP 36								
1	F3647	Twinseat, complete with all attachments ...	1	1	—	1	1	—
2	F3785	Twinseat, complete with all attachments ...	—	—	1	—	—	1
3	E2593	Bolt, Twinseat to seat lug $2\frac{5}{16}$" U/H ...	1	1	—	1	1	—
4	F3066	Bolt, Twinseat to seat lug 3" U/H ...	—	—	1	—	—	1
5	E2287	Washer, front bolt	1	1	1	1	1	1
6	S1–51	Nut, front bolt	1	1	2	1	1	2
7	F3792	Bracket, rear	—	—	1	—	—	1
8	S26-3	Washer, rear bracket to bolt	—	—	2	—	—	2
9	F929	Bolt, rear bracket to pan $\frac{1}{2}$" U/H	—	—	2	—	—	2
SPARKING PLUG—GROUP 37								
10	L10S	Plug, sparking (Champion)	2	2	—	—	—	—
11	F80	Plug, sparking (K.L.G.)	2	2	—	—	—	—
12	H14	Plug, sparking (Lodge)	2	2	—	—	—	—
13	NA10	Plug, sparking (Champion)	—	—	2	2	2	2
14	FE100 (3 point)	Plug, sparking (K.L.G.)	—	—	2	2	2	2
15	HLN	Plug, sparking (Lodge)	—	—	2	2	2	2
16	D297	Cover and Suppressor, plug	2	2	2	2	2	2
17	D262	Cover plug (U.S.A. only)	2	2	2	2	2	2
SPEEDOMETER—GROUP 38								
18	S467/99/L	Speedometer head 120 M.P.H.	1	—	—	1	—	—
19	S467/107/L	Speedometer head 120 M.P.H.	—	1	—	—	1	—
20	S433/3	Speedometer head 120 M.P.H.	—	—	1	—	—	1
21	S467/23/L	Speedometer head 180 K.P.H.	A	—	—	A	—	—
22	S467/47/L	Speedometer head 180 K.P.H.	—	A	—	—	A	—
23	S433/7/L	Speedometer head 180 K.P.H.	—	—	A	—	—	A
24	S467/91/L	Speedometer head, 120 M.P.H.	A	A	—	A	A	—
		For Non-Standard Engine Sprockets (no rev. calibration).						
25	DS40	Bracket, speedometer head	—	—	1	—	—	1
26	F1369	Bolt, bracket, $\frac{5}{8}$" U/H	—	—	2	—	—	2
27	H1015	Distance piece	—	—	2	—	—	2
28	S26-2	Washer, bracket	—	—	2	—	—	2
29	P53279/1	Bulb holder c/w bulb	1	1	1	1	1	1
30	P52305	Bulb only	1	1	1	1	1	1
31	P22469	Rubber ring, speedometer head	1	1	—	1	1	—
32	25578/2	Clamp-bar	1	1	—	1	1	—
33	N1253	Nut, clamp-bar	2	2	—	2	2	—
34	D245A	Cable, speedometer drive (44" long)	—	—	1	—	—	1
35	D245	Cable, speedometer drive (44" long)	1	1	—	1	1	—
36	F3098	Clip, speedometer cable	1	1	1	1	1	1

GROUP 38 – SPEEDOMETER
GROUP 39 – SUSPENSION UNIT

REF. No.	PART No.	DESCRIPTION	5T	6T	TR5	T100	T110	TR6
		SPEEDOMETER DRIVE AT GEARBOX						
1	T924	Pinion, standard ratio layshaft 10T	1	1	1	1	1	1
2	T973	Pinion, wide ratio layshaft 8T	A	A	A	A	A	A
3	T925	Peg, pinion to layshaft	1	1	1	1	1	1
4	T934	Gear, standard ratio driven 16T	1	1	1	1	1	1
5	T975	Gear, wide ratio driven 15T	A	A	A	A	A	A
6	T825	Washer, gear thrust	1	1	1	1	1	1
		SUSPENSION UNIT (GIRLING)—GROUP 39						
7	SB.4/277	Suspension unit	2	—	—	—	—	—
8	SB.4/279	Suspension unit	—	2	—	2	2	—
9	SB.4/259	Suspension unit	—	—	2	—	—	2
10	SB.4/274	Suspension unit (sidecar)	A	—	—	—	—	—
11	SB.4/275	Suspension unit (sidecar)	—	A	A	A	A	A
		To order damper unit only, omit the prefix S.						
12	9054/316A	Bonded bush and sleeve	4	4	4	4	4	4
13	9054/171	Spring retainer	4	4	4	4	4	4
14	9054/151	Dirt shield, outer	2	2	2	2	2	2
15	9054/47	Dirt shield, inner	2	2	2	2	2	2
16	SA.193/57	Spring, 150 lbs. (sidecar)	A	A	A	A	A	A
17	9054/63	Spring, 130 lbs. rate	A	A	A	A	A	A
18	9054/70	Spring, 110 lbs. rate (standard)	2	2	2	2	2	2
19	9054/69	Spring, 90 lbs. rate (road racing)	A	A	A	A	A	A
20	E.2113	Bolt, unit fixing $1\frac{5}{16}$" U/H	4	4	4	4	4	4
21	S.25-2	Washer, lower bolt only	2	2	2	2	2	2
22	PO.172A	Nut, unit fixing bolt	4	4	4	4	4	4
23	S.26-1	Washer, fixing bolt nut	4	4	4	4	4	4

TWIN CARBURETTER FITTINGS — GROUP 40

TR6

The following parts are fitted to the T100 or TR5 with splayed port cylinder head. All other parts are as listed for the single carburetter T100 or TR5.

REF. No.	PART No.	DESCRIPTION	QUANTITY
1	E.3663	Head, cylinder c/w guides	1
2	E.3827	Guide, inlet valve	4
3	E.3828	Guide, exhaust valve	4
4	E.3766	Valve, inlet	2
5	E.3001	Spring, inner valve	4
6	E.3002	Spring, outer valve	4
7	E.1596	Bolt, cylinder head (torque stay)	2
8	E.1484	Bolt, cylinder head 5⅜" U/H	2
9	E.327	Bolt, cylinder head 3⅜" U/H	4
10	E.3844	Adaptor, carburetter to head	2
11	E.3847	Locknut, adaptor	2
12	F.2603	Bolt, carburetter fixing 1⅛" U/H	4
13	S.25-3	Washer, plain	4
14	S.26-3	Washer, spring	4
15	S.1-51	Nut, carburetter fixing	4
16	CP.161	Piston complete standard C.R. 9 : 1	2
17	E.3134	Camshaft, inlet and exhaust	2
18	E.3059R	Tappet	4
19	E.3646	Tube, push rod cover	2
20	E.3550	Box, inlet rocker	1
21	E.3551	Box, exhaust rocker	1
22	E.3552	Gasket, rocker box joint	2
23	E.2980	Stud, rocker box to cylinder head ⅛" O.A.	6
24	E.3302	Washer, stud	6
25	F.879	Nut, stud	6
26	E.3778	Pipe, exhaust L.H.	1
27	E.3780	Pipe, exhaust R.H.	1
28	F.2593	Adaptor and gauze petrol tank	2
29	F.1511	Washer, fibre	5
30	F.4286	Pipe, adaptor to T-piece	2
31	F.4289	Olive, petrol pipe	2
32	F.4290	Nut, petrol pipe union	2
33	F.4285	T-piece	1
34	F.4303	Tap, petrol	1
35	F.4291	Pipe, tap to carburetters	1

GROUP 40 – TWIN CARBURETTER FITTINGS

REF. No.	PART No.	DESCRIPTION	QUANTITY
1	376/77	Carburetter complete	2
2	376/002	Chamber, mixing	2
3	376/064	Top, mixing chamber	2
4	4/137A	Plug screw	2
5	376/100	Jet, main (200)	2
6	376/056	Block, jet	2
7	376/076	Jet, pilot (25)	2
8	376/066	Tube, air intake	2
9	D.216	Throttle cable complete	1
10	D.218	Cable, handlebar to junction box	1
11	244/104	Junction box	1
12	D.219	Cable, junction box to carburetter	2

INDEX

	Page No.
Group 1—CARTON PACKS	10
Group 2—ENGINE	19
Connecting rods	23
Crankcase	23
Crankcase bearings	32
Crankcase breather	34
Crankcase oil filter	32
Crankcase and flywheel assembly	22
Cylinder block	19
Cylinder head	19
Inlet manifold	19
Engine sprocket	35
Oil pump	32
Oil release valve	33
Overhead rocker gear	34
Piston, rings, etc.	21
Push rods	34
Push rod cover tube	34
Rocker oil feed and drain pipes	35
Studs and bolts for crankcase halves	32
Tappets and tappet blocks	34
Timing cover	33
Timing gear and camshafts	33
Valves, guides and springs	21
Group 3—GASKET SET	35
Group 4—GEARBOX	36
Clutch and shock absorber	41
Clutch control	42
Gear control (enclosed footchange)	40
Gear control (selector mechanism)	40
Gearbox casing	36
Gearbox fittings	36
Gearbox casing bearings	37
Gearbox sprocket	40
Kickstarter	41
Shafts and gears	37
Group 5—WIDE RATIO GEARS	43
Group 6—STANDARD RATIO GEARS	43
Group 7—CLOSE RATIO GEARS	43
R.P.M. and gear ratio charts	44
Group 8—EXHAUST SYSTEM	45

	Page No.
Group 9—FRAME	48
Front portion	50
Rear portion	50
Swinging fork	51
Group 10—STAND	51
Front stand	51
Centre stand	51
Prop stand	51
Group 11—ENGINE PLATES	52
Group 12—FRONT FORK	53
Group 13—FRONT WHEEL	59
Group 14—REAR WHEEL	64
Group 15—REAR WHEEL (Quickly detachable)	67
Group 16—MUDGUARDS	68
Front mudguard	68
Front valance mudguard	70
Rear mudguard	70
Licence holder	70
Group 17—NUMBER PLATE	71
Group 18—PETROL AND OIL TANK	71
Parcel grid	74
Petrol tank	71
Oil tank	74
Group 19—CHAINGUARD	74
Group 20—PRIMARY CHAINCASE	76
Group 21—HANDLEBAR	78
Air control	80
Clutch control	80
Front brake control	80
Handlebar bend	78
Throttle control	78
Magneto control	80
Group 22—CONTROL CABLE	81
Air cable	82
Clutch cable	81
Front brake cable	81
Ignition cable	82
Throttle cable	81

Page No.

Group 23—OVERSEAS HANDLEBARS 82

Group 24—REAR BRAKE CONTROL 83

Group 25—FOOTRESTS 83

Group 26—BATTERY CARRIER AND TOOLBOX 84

Group 27—TOOLKIT 86

Group 28—AIR FILTER 88

Group 29—LEGSHIELDS 89

Group 30—SIDECAR FITTINGS 89

PROPRIETARY FITTINGS 90

Group 31—AMAL CARBURETTER 91

Group 32—S.U. CARBURETTER 94

Group 33—CHAINS 97

Group 34—LUCAS LIGHTING AND IGNITION EQUIPMENT (Dynamo and Magneto) 98

Battery 101
Cut-out and regulator unit 98
Dynamo 98
Handlebar switches and push buttons 101
Headlamp—Nacelle type 99
Headlamp—Trophy type 99
Horn 99
Magneto 102
Magneto (Wader type) 102
Nacelle instrument panel 101
Stop-tail lamp 101
Wiring harness 101

Group 35—LUCAS LIGHTING AND IGNITION (Alternator) 104

Alternator 104
Battery 106
Distributor 104
Headlamp 105
Horn push and dipper switch 106
Horn 106
Ignition coil 104
Nacelle instrument panel 106
Rectifier 104
Stop-tail lamp 105
Wiring harness 106

Page No.

Group 36—TWINSEAT 107

Group 37—SPARKING PLUGS 107

Group 38—SPEEDOMETER 107

Group 39—SUSPENSION UNITS (GIRLING) 108

Group 40—TWIN CARBURETTER FITTINGS 109

ILLUSTRATION INDEX

		Page No.
Fig. 1	Inlet Manifolds	20
,, 2	Engine 5T Crankcase, cylinder block and head	24
,, 3	Engine 5T Crankshaft, connecting rods, pistons and timing gear	24
,, 4	Engine 6T Crankcase, cylinder block and head	26
,, 5	Engine 6T Crankshaft, connecting rods, pistons and timing gear	26
,, 6	Engine TR5 and T100, Crankcase, cylinder block and head	28
,, 7	Engine TR5 and T100, Crankshaft, connecting rods, pistons and timing gear	28
,, 8	Engine TR6 and T110, Crankcase, cylinder block and head	30
,, 9	Engine TR6 and T110, Crankshaft, connecting rods, pistons and timing gear	30
,, 10	Gearbox	38
,, 11	Clutch and shock absorber	42
,, 12	Exhaust pipes and silencers	46
,, 13	Frame	48
,, 14	Engine plates, studs, bolts, nuts and washers	52
,, 15	Telescopic fork, 5T, 5T, T100 and T110	54
,, 16	Telescopic Fork TR5 and TR6	56
,, 17	Front Wheel 5T, 6T, TR5 and TR6	60
,, 18	Front Wheel T100 and T110	62
,, 19	Rear Wheel	65
,, 20	Rear Wheel (Quickly Detachable)	66
,, 21	Front and rear mudguards	68
,, 22	Petrol tanks and fittings	72
,, 23	Oil tank	75
,, 24	Primary chaincase	77
,, 25	Handlebar and controls	79
,, 26	Batter Carrier and Toolbox	85
,, 27	Tool Kit	87
,, 28	Air filter	88
,, 29	Amal carburetter	92
,, 30	S.U. Carburetter Type M.C.2	95
,, 31	Headlamp	100
,, 32	Lucas Mageto	103

To assist the owner and dealer in identifying requirements, this book contains numerous exploded views of major assemblies. Each component part is numbered and by cross reference to the Illustration index, the part number of the component will be found. Against each part number a page and reference number is shown and by referring to the appropriate page, the full description of the part will be found against the reference number.

Example.

To find the part number of a scraper ring for the model 5T.

1. Refer to illustration index above where it will be found that the exploded view of the 5T crankshaft assembly is on page 24.
2. Note that the number of the scraper ring on the illustration is 4.
3. Refer to the index for the illustration in question on page 25.
4. Note that No. 4 is part number GE29, listed on page 22, Reference line No. 13.